ALPHA MICROSYSTEMS
RIGHT. FROM THE START.

Roadrunner 060 Upgrade Instructions

PDI-00176-10, Rev. A01

FIRST EDITION: June 1997

To re-order this document, request part number PDI-00176-10

FCC Notice

This equipment has been tested and found to comply with the limits for a Class A digital device, pursuant to Part 15 of the FCC Rules. These limits are designed to provide reasonable protection against harmful interference when the equipment is operated in a commercial environment. This equipment generates, uses and can radiate radio frequency energy and, if not installed and used in accordance with the instruction manual, may cause harmful interference to radio communications. Operation of this equipment in a residential area is likely to cause harmful interference in which case the user will be required to correct the interference at his own expense.

Canadian Department of Communications Compliance Statement

This equipment does not exceed Class A limits per radio noise emissions for digital apparatus set out in the Radio Interference Regulations of the Canadian Department of Communications. Operation in a residential area may cause unacceptable interference to radio and TV reception requiring the owner or operator to take whatever steps are necessary to correct the interference.

Avis de Conformité aux Normes du Ministère des Communications du Canada

Cet équipment ne deapsse pas les limits de Classe A d'émission de bruits radioélectriques pour les appareils numeriques tels que prescrites par le Règlement sur le brouillage radioélectrique établi par le ministère des Communications du Canada. L'exploitation faite en milleu résidential peut entrainer le brouillage des réceptions radio et tele, ce qui obligerait le propriétaire ou l'opératour à pendre les dispositions nécessaires pour en éliminer les causes.

Battery Warning

CAUTION: Danger of explosion if battery is incorrectly replaced. Replace only with the same or equivalent type recommended by the manufacturer. Discard used batteries according to the manufacturer's instructions.
ATTENTION: Il y a danger d'explosion s'il y a replacement incorrect de la batterie. Remplacer uniquement avec une batterie du même type ou d'un type recommandé par le constructeur. Mettre au rébut les batteries usagées conformément aux instructions du fabricant.

For AM-6000 systems, replace batteries with Panasonic or Ray-O-Vac BR1225 only. Use of another battery may present a risk of fire or explosion. Replacement batteries may be ordered from your authorized Alpha Micro reseller.

Electrical Warning

This equipment contains components that can be damaged by static electricity. Follow all electronic discharge precautions when handling the equipment. For example, touch the metal back panel of the CPU or peripheral chassis to dissipate any electrical charge before touching the circuit boards or equipment within the chassis. After turning off power, before you open your computer chassis, unplug the cord from the electrical outlet to guard against electrical shock.

SOFTWARE SECURITY DEVICE IDENTIFICATION NUMBER: _____

The Alpha Micro Software Security Device (SSD) is a customized integrated circuit that personalizes the computer, providing identity verification for it. Certain Alpha Micro and non-Alpha Micro software may require that your computer contain an SSD in order to run software that has been customized to run only on your computer.

Please enter the identification of your SSD above. The SSD identification number should be on your computer ID label under "SSD Serial No." (Another way of finding the number is to look at the SSD itself. The SSD is located in an integrated circuit location on the CPU board; its identification number is printed on the SSD itself.) Software vendors may ask you for the SSD number if they are customizing software to run only on your computer.

This document may contain references to products covered under the following U.S. Patent Number(s): 4,530,048

ALPHA MICROSYSTEMS
2722 Fairview Street
P.O. Box 25059
Santa Ana, CA 92704

TABLE OF CONTENTS

CHAPTER 1 - INTRODUCTION..... 1

GENERAL PRODUCT DESCRIPTION 1
AM-176 Features..... 1
Instruction Cache Memory..... 2
Environmental Specifications..... 2
Power Specifications..... 3
AM-319-20 Features..... 3

CHAPTER 2 - COMPATIBILITY 5

SOFTWARE COMPATIBILITY 5
HARDWARE COMPATIBILITY..... 5
Compatible Board List 5
Unsupported Hardware..... 6
AM-176 SCSI TAPE AND HARD DISK DRIVE REQUIREMENTS..... 6
SCSI Tape Drives..... 8
SCSI Hard Disk Drives 8
SCSI-2 Dispatcher 9

CHAPTER 3 - UPGRADING ROADRUNNER 060 ON-BOARD MEMORY 11

ELECTRONIC EQUIPMENT HANDLING PRECAUTIONS.....11
INSTALLING THE EXTERNAL CACHE SIMM MODULE.....12
INSTALLING MEMORY 13
Setting Memory Jumpers 14
Changing Memory SIMMs.....15

CHAPTER 4 - CONFIGURING THE ROADRUNNER 060.....17

AM-176 BOARD AND JUMPER DEFINITION TABLE.....17
AM-176 CONNECTORS 19
THE CMOS MENU 20
Roadrunner 060 Initialization Routine.....20
CMOS Menu Options 20
Important Note.....22
ETHERNET PORTS 22
AM-319-20 BOARD CONFIGURATION.....23
REMOTE RESET CAPABILITY 24
INSTALLING THE SSD CHIP.....24

REPLACING THE TIME AND DATE BATTERY 25
Restoring Your CMOS Settings 26
ON-BOARD SERIAL PORTS....26
FRONT PANEL STATUS DISPLAY CODES....26
SERIAL UPS MONITORING 31

CHAPTER 5 - BEGINNING A ROADRUNNER 060 UPGRADE 33

ELECTRONIC EQUIPMENT HANDLING PRECAUTIONS....33
STEP 1 - PROTECTING YOUR DATA....34
STEP 2 - UPGRADE CIRCUIT BOARDS AND PERIPHERALS....35
STEP 3 - INSTALL THE CORRECT VERSION OF AMOS....35
STEP 4 - CREATE A NEW SYSTEM MONITOR....35
STEP 5 - CREATE A NEW SYSTEM INITIALIZATION FILE 36
STEP 6 - CREATE NEW SUBSYSTEM DISK DRIVERS 38
STEP 7 - NETWORK CONFIGURATION 38
STEP 8 - PROTECT YOUR DATA AGAIN 39
STEP 9 - INSTALL THE ROADRUNNER 060 HARDWARE 39

CHAPTER 6 - TESTING THE NEW SYSTEM 41

RUNNING A SELF-TEST....41
SET YOUR CMOS CONFIGURATION AND BOOT....41
RENAMING THE SYSTEM MONITOR AND INITIALIZATION FILES....42
BACK UP AND MAKE A NEW WARM BOOT TAPE....42
ADDITIONAL DOCUMENTATION....42

APPENDIX A - SCSI TERMINATION 43

SCSI TERMINATION USING EXTERNAL TERMINATOR OPTION 43
ATTACHING EXTERNAL DEVICES 44
TERMINATOR POWER 44

APPENDIX B - READ-AHEAD AND WRITE BUFFERING....45

INTRODUCTION....45
READ-AHEAD....45
Controlling Read-Ahead 46
WRITE BUFFERING 46
Potential Pitfalls 47
Setting Up Write Buffering 47
FINAL NOTES 48

APPENDIX C - AM-4000 PEDESTAL CHASSIS UPGRADE....49

PREPARING FOR THE UPGRADE 49

ACCESSING YOUR HARDWARE 49
Removing the Old I/O Panel and the AM-190 Board....49
Removing Obsolete Hardware....50
INSTALLING THE AM-319-20 BOARD 50
THE NEW I/O PANEL ASSEMBLY....50
INSTALLING THE AM-176 BOARD 51
X-Bus Cable Routing 52
Installing the SCSI Cable....53
INSTALLING THE NEW I/O REAR PANEL 53
FINISHING UP 54

APPENDIX D - AM-4000 RACK MOUNT CHASSIS UPGRADE....55

PREPARING FOR THE UPGRADE 55
ACCESSING YOUR HARDWARE 55
REMOVING THE OLD CPU....55
EXTENDING THE CARD CAGE 56
INSTALLING THE AM-319-20 BOARD 56
NEW DC POWER HARNESS INSTALLATION 57
REAR PANEL I/O ASSEMBLY....57
INSTALLING THE AM-176 BOARD 58
Installing the SCSI Cable....60
FINISHING UP 61

APPENDIX E - AM-4000 IN AM-990 OR AM-990 JUMBO CHASSIS UPGRADE....63

PREPARING FOR THE UPGRADE 63
ACCESSING YOUR HARDWARE 63
REMOVE YOUR OLD CPU....64
ASSEMBLING THE NEW REAR I/O PANEL....65
INSTALLING THE AM-319-20 BOARD 65
INSTALLING THE AM-176 BOARD 67
X-Bus Cable Routing 68
Installing the SCSI Cable....68
INSTALLING NEW REAR I/O PANEL 69
FINISHING UP 70

APPENDIX F - SUPER EAGLE DESKSIDE CHASSIS UPGRADE 71

PREPARING YOUR SYSTEM FOR THE UPGRADE....71
REMOVING CHASSIS COVER 71
ACCESSING THE OLD ROADRUNNER BOARD 72
REMOVE OLD ROADRUNNER BOARD 73
PREPARE CHASSIS FOR UPGRADE....73
INSTALLING THE AM-176 BOARD 74
Installing the SCSI Cable....75
FINISHING UP 75

APPENDIX G - SUPER EAGLE IN AM-990 OR AM-990 JUMBO CHASSIS UPGRADE 77

PREPARING FOR THE UPGRADE 77
ACCESSING YOUR HARDWARE 77
ASSEMBLING THE NEW REAR I/O PANEL.....78
REMOVING THE OLD ROADRUNNER (AM-174) BOARD 79
INSTALLING THE AM-176 BOARD 79
X-Bus Cable Routing 80
Installing the SCSI Cable.....80
INSTALLING NEW REAR I/O PANEL 81
FINISHING UP 82

LIST OF ILLUSTRATIONS

Figure 3-1: ESD Wrist Strap 11
Figure 3-2: AM-176 SIMM Module Installation 12
Figure 3-3: JP4 Memory Jumpers 14
Figure 4-1: AM-176 Board 18
Figure 4-2: AM-319-20 Board Configuration 23
Figure 4-3: SSD Chip Removal Tool 24
Figure 4-4: AM-319-20 Backup Battery Removal 25
Figure A-1: Active External Terminator Installation 43
Figure C-1: AM-319-20 and AM-176 Cabling (Pedestal Chassis) 52
Figure D-1: AM-319-20 and AM-176 Cabling (Rack Mount Chassis) 59
Figure D-2: Retainer Brackets (Rack Mount Chassis) 60
Figure E-1: AM-990 Enclosure Removal 64
Figure E-2: AM-319-20 Board and Cable Routing (AM-990 Chassis) 67
Figure E-3: AM-319-20 and AM-176 Cable Routing (AM-990 Chassis) 68
Figure E-4: AM-176 Retainer Bracket Placement 70
Figure F-1: Deskside Chassis Cover Removal 72
Figure F-2: Deskside Chassis Foot Installation 74
Figure G-1: AM-990 Enclosure Removal 78
Figure G-2: AM-319-20 and AM-176 Cable Routing 80
Figure G-3: AM-176 Retainer Bracket Placement 82

LIST OF TABLES

Table 2-1: The Two SCSI Busses in a Roadrunner 060 8
Table 3-1: Roadrunner 060 Memory Configuration Table 13
Table 3-2: AM-176 Memory Module Jumper (JP4) Settings Table 14
Table 4-1: Jumper Configuration Table for the AM-176 board 19
Table 4-2: AM-176 - Connector Description Table 19
Table 4-3: Front Panel Status Codes 27
Table 5-1: Dispatcher Switch Table 37

Chapter 1 - Introduction

The Roadrunner 060 is a powerful upgrade for Alpha Microsystems computers. Employing the field-proven Roadrunner concept, it is built around two boards. One is the Roadrunner 060, or AM-176 board, as it's referred to in this manual. The other is the AM-319-20 system board.

The AM-176 board provides the Motorola 68060 CPU, memory, network interface, and SCSI interfaces—including a high-bandwidth Wide SCSI bus. The AM-319-20 system board provides serial I/O, parallel I/O ports, two paddle card busses, and other system functions. The two-board combination allows higher performance and the versatility of modular upgrades. To upgrade an AM-4000, you replace the existing single-board processor with an AM-176 and an AM-319-20. Since Super Eagle systems already have an AM-319-20, you simply add an AM-176.

The following AM-4000 configurations can be upgraded with AM-319-20 and AM-176 boards:

- AM-4000M or AM-4000 VME 6-slot in old style pedestal chassis
- AM-4000 VME 10-slot or 21-slot rack mount chassis
- AM-4000M or AM-4000-06 VME in AM-990 chassis
- AM-4000-10 VME in AM-990 double-wide (jumbo) chassis

All members of the Super Eagle family of computers can be upgraded with an AM-176 board to complement the existing AM-319-20. The three Super Eagle chassis style are: deskside, AM-990, and AM-990 double-wide (jumbo).

Please contact your dealer or Alpha Microsystems for information on the different upgrade kits used for each of these system types.

GENERAL PRODUCT DESCRIPTION

This section outlines the AM-176 and AM319-20 boards' basic features and specifications.

AM-176 Features

The basic features of the AM-176 are:

- Performance at over 100 MIPS (million instructions per second) at 66MHz
- 32-bit bi-directional data path
- 32-bit address path
- 4GB of direct memory addressability
- 64KB external cache memory SIMM
- 8KB on-chip processor instruction cache memory and 8KB of data cache
- Enhanced power fail restart circuitry

- Seven interrupt levels with vector capability
- DMA channel capability
- On-board bootstrap PROM and battery backed CMOS containing several boot routines that enable you to change the I/O device the computer boots from. Also contains full power-up self-test of various system features.
- On-board serial interface
- DMA expansion connector (multi-processor)
- On-board Ethernet controller with 32-bit DMA transfer capability
- On-board high performance Wide SCSI-2 expansion interface with 32-bit DMA controller
- Four on-board single inline memory module (SIMM) expansion slots, which support 60ns DRAMs for up to 256MB of memory.

Instruction Cache Memory

There is a high probability that the instructions in a computer program will be used repeatedly within a very short time. To take advantage of this probability and decrease retrieval time, the AM-176 board contains an external combined instruction and date cache, in addition to the 68060 internal cache. The external cache is 64KB in size, implemented as an external cache SIMM, the AM-701 board (PDB-00701-00). The CPU fills the cache entries one longword at a time.

This cache improves the overall system performance by reducing the number of clock cycles required by the processor to fetch information from memory, thereby increasing the bus bandwidth available for other bus masters in the system. During a write cycle, the cache circuitry writes data to the cache SIMM as well as to the item in memory, maintaining consistency between the data in cache and the data in memory.

When the computer boots, the cache on the AM-701 board is automatically enabled. If you have an application that requires you to disable the cache, you can enter the cache disabling command CBDS at AMOS command level. To re-enable the cache, enter the command CBEN.

Environmental Specifications

Computer external operating temperature	60 to 90 degrees F (16 to 32.2 degrees C)
Humidity	10% to 90% (non-condensing)

Environmental Specifications

Power Specifications

Voltage	*Current Draw*
+5 volts	4.3A max with 256MB DRAM 3.9A with 8MB DRAM
+12 volts	@30mA

Maximum DC Power Requirements

The power requirements noted above are as observed during testing. Power requirements may vary depending on DRAM manufacturer.

AM-319-20 Features

The following are the basic features of the AM-319-20:

- Four on-board serial I/O ports
- Supporting logic for four parallel ports
- SSD (Software Security Device) chip
- Ethernet port, with AUI (DB-15) and 10BaseT connectors, in addition to the Ethernet port on the AM-176. Presently, the Ethernet port on the AM-319-20 should only be used as a backup for the high-speed Ehternet port on the AM-176 board.
- UPS monitoring port for switch-contact type functions, such as power failure and low battery.

Chapter 2 - Compatibility

Before you proceed with your upgrade, it’s important to make sure you have all the hardware and software you’ll need. This chapter discusses the hardware and software compatibility issues that may arise during your Roadrunner 060 installation.

SOFTWARE COMPATIBILITY

To be AM-176 compatible, the operating system must be AMOS 2.3A or later.

Because the AM-176 has a number of features not found in earlier Alpha Micro CPU boards, you should not attempt to use the board with earlier versions of AMOS. Versions earlier than AMOS 2.3A will not work.

If you need information on third party software compatibility, see the AM-6000 SIG (Special Interest Group) located on TABBS, Alpha Micro's technical assistance bulletin board. The AM-6000 SIG is also a valuable source of other AM-6000 related information.

HARDWARE COMPATIBILITY

Only certain circuit boards are compatible with the AM-176 board. Following is a list of all such boards with their minimum acceptable revision levels.

Compatible Board List

- AM-219 floppy controller board, Rev. A06
- AM-319-20 system board, Rev. B04
- AM-324 parallel printer board, Rev. A08
- AM-333 RJE paddle board, Rev. A00
- AM-355 6-port serial I/O board, Rev. B04
- AM-358 8-port serial I/O board, Rev. C02
- AM-359-00 or AM-359-01 serial I/O board, Rev. C05
- AM-701 64KB cache SIMM, Rev. A01

All other I/O boards are incompatible. The next section gives a partial list of boards which aren’t supported.

Unsupported Hardware

Specifically, the following products are not supported for use with the AM-176 CPU board:

- AM-117-90 S-100 bus adapter
- AM-182 cache board
- AM-212 floppy controller
- AM-214 floppy controller
- AM-330-90 communications controller
- AM-350-00 serial I/O controller
- AM-350-01 serial I/O controller
- AM-353 synchronous I/O boards
- AM-362 and AM-340 Ethernet controllers
- AM-415 disk controller
- AM-515 intelligent SCSI controller
- AM-515-10 magnetic tape controller
- AM-520 disk controller
- AM-520-10 disk controller
- AM-630 VCR controller
- AM-640 magnetic tape controller
- AM-730 and AM-740 memory boards.

AM-176 SCSI TAPE AND HARD DISK DRIVE REQUIREMENTS

The SCSI controller on the Roadrunner 060 board is a 32-bit, bus mastering RISC processor that controls data flow between SCSI peripherals and the CPU/memory subsystem. The controller provides two bus interfaces. One is a 50-pin SCSI bus interface, the same as on prior Roadrunners, Eagles and the AM-4000. The second is a 68-pin Wide SCSI bus interface. These busses are mutually exclusive. That is, all devices must connect to one of the two busses; the other connector cannot be used. You cannot attach peripherals to both busses in the same computer!

For peripheral compatibility and system performance, the significance of the two busses is as follows:

- The SCSI bus supports the same SCSI-2 disk drives used in Eagle systems and Roadrunner-equipped systems. The bus supports all Alpha Microsystems streamer tapes, DAT tapes, CD-ROMs, and the AM-642 SCSI-to-Pertec Converter for ½" tape drives. The bus is one byte wide (8 bits plus parity) and supports a maximum transfer rate of 10MB per second. A 50-conductor flat cable for connecting peripherals to the bus is included with the Roadrunner 060.
- The new Wide SCSI bus is twice as wide: two bytes, or 16 bits plus 2 parity bits. Doubling the width of the data path doubles the maximum transfer rate to 20MB per second. The bus originates at a 68-pin connector on the Roadrunner 060 board. To attach peripherals to the Wide

SCSI bus, you must order the Wide SCSI Option Kit, which includes a 68-conductor, multi-device cable. The kit is offered in versions to fit various chassis styles. Installation instructions are included in this document.

The Wide SCSI bus has the following advantages:

- Disk-intensive applications are potentially faster with Wide SCSI disk drives.
- It supports up to 15 devices, where standard SCSI supports only seven, so you can potentially work with bigger configurations.

While you can use only one of the two SCSI busses, you can attach both narrow and Wide SCSI-2 devices to either bus. If you use the Wide SCSI bus, you need an adapter for each narrow SCSI-2 device, such as a tape streamer or DAT drive. The adapter allows the 68-conductor bus cable to mate with the 50-pin connector on the SCSI-2 device. Similarly, you can attach Wide SCSI-2 drives to the narrow SCSI bus by ordering the appropriate adapter from Alpha Microsystems.

To ensure reliable SCSI operation, the SCSI bus must be ***actively*** terminated. The passive external terminators used on earlier AMOS systems are not adequate for the Roadrunner 060. Your upgrade kit includes an active terminator for the narrow bus (PRA-00222-21); the Wide SCSI option kit includes an active terminator for the wide bus (PRA-00222-20). See Appendix A for more information about SCSI bus termination.

Table 2-1 summarizes the SCSI rules:

	SCSI Bus	Wide SCSI Bus
Alpha Micro Usage	Same as SCSI bus used in Eagles, other Roadrunners, and the AM-4000 system	Introduced in the Roadrunner 060
Bus Width	One byte (8 bits + 1 parity)	Two bytes (16 bits + 2 parity)
Bus Connectors	50-pin	68-pin
Maximum Transfer Rate	10 MB/sec	20 MB/sec
Max. Number of Connected Devices	7	15
Availability in Roadrunner 060 Systems	Cabling is standard; comes with every Roadrunner 060	Optional Wide SCSI Kit required.
How Peripherals Connect to the Busses:		
Devices with *50-pin* SCSI Connector • SCSI-2 disks (“narrow disks”) • Streamer tapes, 2GB or less • DAT tapes • Other standard SCSI-2 devices	These devices connect directly to the SCSI bus, same as in other Roadrunners, Eagles, and AM-4000.	Each 50-pin device requires a PDB-00440-91 Adapter to connect to the Wide SCSI bus.
Devices with *68-pin* Wide SCSI Conn. • Fast-Wide SCSI-2 disks (“Wide disks”) • 26GB ¼-in. streamer tape (future product, now being qualified)	Each device requires a PDB-00440-90 Adapter to connect to the SCSI bus.	Connect directly to the 68-pin Wide SCSI bus cable. Use the /EW dispatcher switch to invoke Wide SCSI operation.
Wide and Narrow (“not-Wide”) disk drives mixed in same system	Wide SCSI disks are no faster than narrow disks.	Wide SCSI performance advantage is sacrificed, even on Wide SCSI bus.
External SCSI Connector	50-pin external SCSI connector furnished as standard. 50-pin active terminator furnished in Upgrade Kit.	68-pin Wide SCSI external connector and 68-pin Wide SCSI active terminator furnished in Wide SCSI Option Kit.

Table 2-1: The Two SCSI Busses in a Roadrunner 060

SCSI Tape Drives

Any SCSI tape drive which works with the AM-4000 or Super Eagle will also work in your upgraded Roadrunner 060. No firmware revisions are necessary.

In order to warm boot from a Tandberg streaming tape drive, make sure you enter it as the alternate boot unit ID in the CMOS Configuration Menu.

SCSI Hard Disk Drives

For optimum performance, use Wide SCSI-2 drives attached to the Wide (68-pin) SCSI connector. Mixing SCSI-1, SCSI-2, and Wide SCSI-2 disks on the same bus tends to degrade performance and is not recommended.

SCSI-2 Dispatcher

You must define a SCSI dispatcher in the system initialization command file. AMOS uses the dispatcher to communicate with the SCSI controller chip. The dispatcher handles all communications with the SCSI controller chip.

There are two versions of the SCSI dispatcher:

- SCZR60.SYS is a high-performance version of the SCSI dispatcher, which supports command queuing, synchronous transfers, multi-threaded operations, and scatter-gather operations.
- SIMR60.SYS is a simplified version of the SCSI dispatcher and does not support the high performance features supported in SCZR60.SYS. You would use SIMR60.SYS when making warm boot tapes and for temporary situations with computers which have not had the AMOS PIC code installed.

While both of these dispatchers support both narrow and Wide SCSI-2 devices, using the SCZR60.SYS dispatcher increases system performance greatly, and will allow you to use DCACHE and write cache efficiently. Both dispatchers also support several option switches to let you modify their performance, as described in Chapter 5.

Please refer to Chapter 5 for instructions on enabling the Roadrunner 060's SCSI dispatcher.

Chapter 3 - Upgrading Roadrunner 060 On-Board Memory

The AM-176 has four on-board SIMM (single inline memory module) expansion slots, which support 60ns DRAMs. Because the memory is located on-board, it can be accessed much faster than memory accessed over the VME bus—i.e., AM-730 and AM-740 memory boards used with earlier CPU boards.

The following are generalized procedures. ***Do not attempt any installation or mounting until you reach the appropriate place in the installation procedure for your configuration***. Please refer to the appropriate appendix for specific instructions.

After the AM-176 board is mounted securely (either on its mounting panel or on the screen), install the external cache and memory expansion SIMM modules. You must also set the JP4 jumpers (memory size select) according to the settings in Table 3-2 later in this chapter.

ELECTRONIC EQUIPMENT HANDLING PRECAUTIONS

While your computer's hardware is exposed and the AC power cord is unplugged, the components are vulnerable to damage caused by static discharge. Your body and clothing are capable of storing an electrical charge that can damage or destroy unprotected electronic components. Before you handle any computer hardware, make certain your work area is properly protected against static discharge. There are a number of commercially available static protection devices, like the wrist strap shown below, designed specifically to protect your equipment from harmful static discharge.

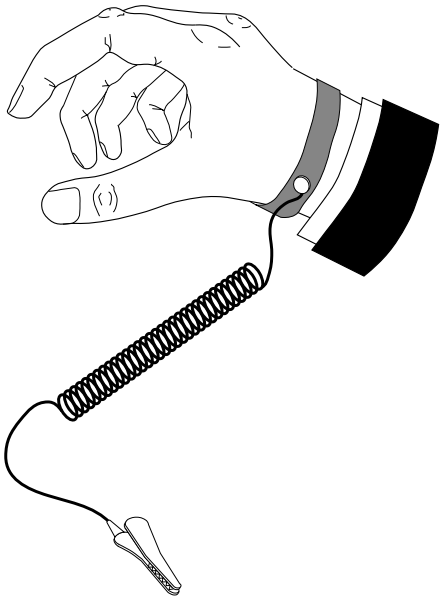

Figure 3-1: ESD Wrist Strap

INSTALLING THE EXTERNAL CACHE SIMM MODULE

The external cache SIMM must only be installed in the J1 slot, labeled CACHE SIMM. Never install memory expansion SIMMs in J1, or the cache SIMM at any other location.

To install the 64KB external cache SIMM (PDB-00701-00) on the AM-176 board:

1. Align pin-1 on the external cache SIMM module with pin-1 on connector at J1. Pin-1 on the SIMM module is on the notched end of the module (see Figure 3-2 below).
2. Insert the cache SIMM module into the J1 connector at a slight angle.
3. Rotate into the upright position.

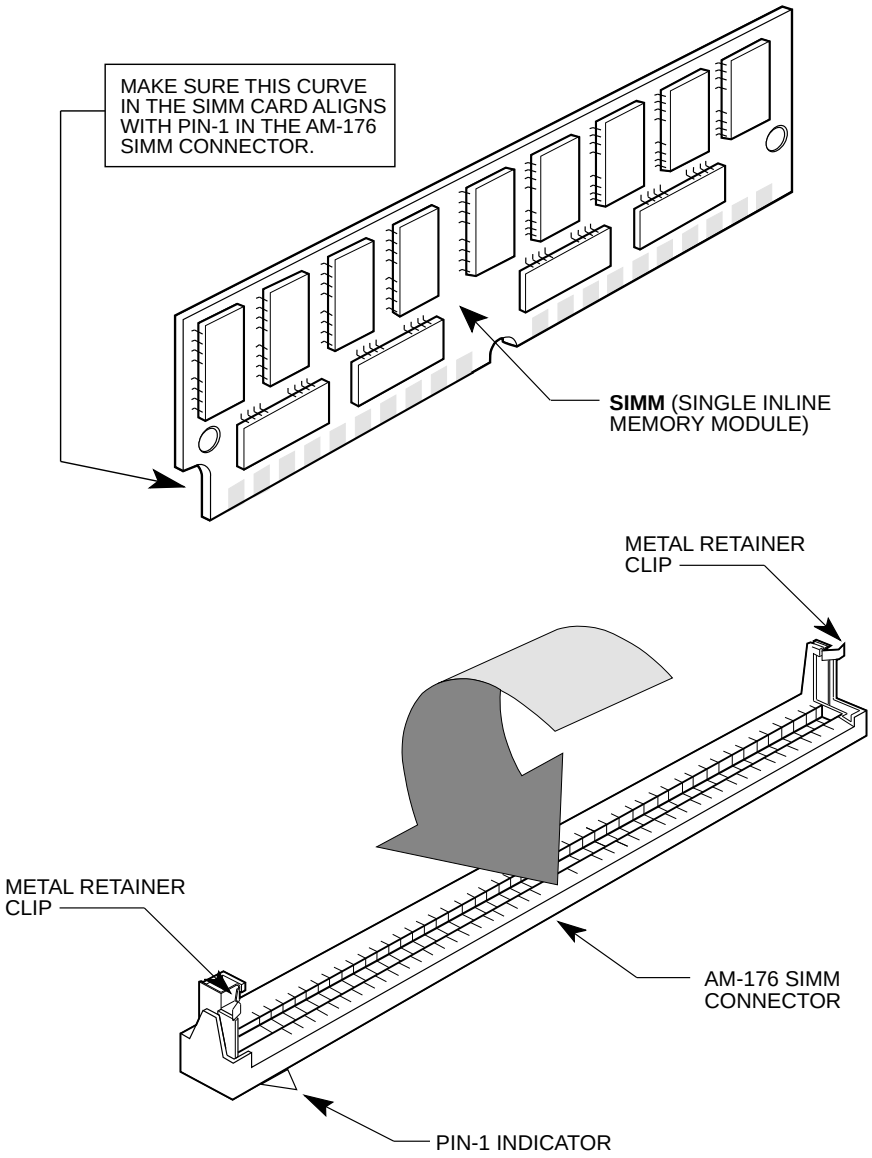

Figure 3-2: AM-176 SIMM Module Installation

The cache SIMM will engage the metal retainer clips and click into position, locking in place.

When properly installed, the components on the cache SIMM module will be facing in toward the other memory SIMMs.

INSTALLING MEMORY

The AM-6000 supports a minimum of 8MB and a maximum of 256MB of main memory. Memory is implemented as paired SIMM modules (of equal capacity) of 4MB, 8MB, 16MB, 32MB, or 64MB each. Use 60ns SIMMs only; **70ns SIMMs will not work**. The following table shows the possible memory SIMM configurations:

Install these memory SIMMs	**... to obtain this amount of Main Memory**																			
	8 MB	**16 MB**	**16 MB**	**24 MB**	**32 MB**	**32 MB**	**40 MB**	**48 MB**	**64 MB**	**64 MB**	**72 MB**	**80 MB**	**96 MB**	**128 MB**	**128 MB**	**136 MB**	**144 MB**	**160 MB**	**192 MB**	**256 MB**
4MB Memory	2	4		2			2				2					2				
8MB Memory			2	2	4			2				2					2			
16MB Memory						2	2	2	4				2					2		
32MB Memory										2	2	2	2	4					2	
64MB Memory															2	2	2	2	2	4

Table 3-1: Roadrunner 060 Memory Configuration Table

To install memory expansion SIMMs on the AM-176 board, use this procedure:

Remember, don't follow this procedure until you're at the proper place in the installation process for your upgrade.

1. Memory SIMMs must be installed in **pairs of equal capacity**.
2. Always install the SIMMs of largest capacity first.
3. Always install the first pair of SIMM modules at Bank0. Use Bank1 for a second pair of SIMM modules.
4. Insert the first SIMM in connector J2. Align pin-1 at the notched end of the SIMM module with pin-1 on the connector (as in Figure 3-2).
5. Insert the SIMM module into the connector at a slight angle.
6. Rotate into the upright position.

   The SIMM will engage the metal retainer clips and click into position, locking the SIMM in place.
7. Repeat steps 4 through 6 for the second SIMM, at connector J4. If you are using a second pair of SIMMs, insert them into J3 and J5 using the same procedure.

Setting Memory Jumpers

After installing the SIMMs, set the jumpers at location JP4 on the AM-176 board according to the table below. As you turn on the computer, AMOS will automatically make the memory available. See the diagram of the AM-176 in the next chapter for the location of the JP4 jumpers.

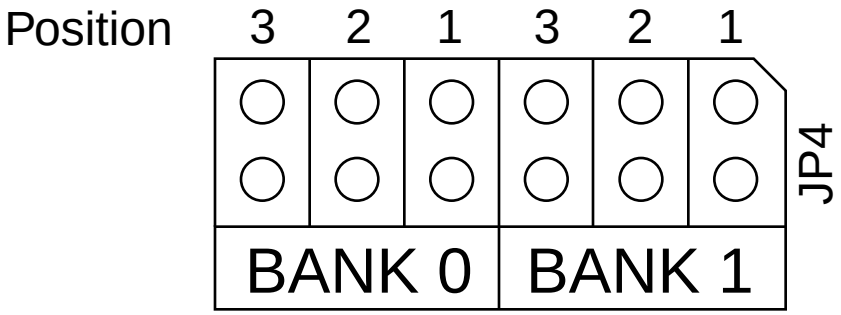

Figure 3-3: JP4 Memory Jumpers

Memory Module Size Combinations:	***Total Memory***	***Bank0 Settings Position:***			***Bank1 Settings Position:***		
		3	***2***	***1***	***3***	***2***	***1***
2 x 4MB	8MB	X	X	X	O	O	O
4 x 4MB	16MB	X	X	X	X	X	X
2 x 8 MB	16 MB	X	X	O	O	O	O
2 x 8MB + 2 x 4MB	24MB	X	X	O	X	X	X
4 x 8MB	32MB	X	X	O	X	X	O
2 x 16MB	32MB	X	O	X	O	O	O
2 x 16MB + 2 x 4MB	40MB	X	O	X	X	X	X
2 x 16MB + 2 x 8MB	48MB	X	O	X	X	X	O
4 x 16MB	64MB	X	O	X	X	O	X
2 x 32MB	64MB	X	O	O	O	O	O
2 x 32MB + 2 x 4MB	72MB	X	O	O	X	X	X
2 x 32MB + 2 x 8MB	80MB	X	O	O	X	X	O
2 x 32MB + 2 x 16MB	96MB	X	O	O	X	O	X
4 x 32MB	128MB	X	O	O	X	O	O
2 x 64MB	128MB	O	X	X	O	O	O
2 x 64MB + 2 x 4MB	136MB	O	X	X	X	X	X
2 x 64MB + 2 x 8MB	144MB	O	X	X	X	X	O
2 x 64MB + 2 x 16MB	160MB	O	X	X	X	O	X
2 x 64MB + 2 x 32MB	192MB	O	X	X	X	O	O
4 x 64MB	256MB	O	X	X	O	X	X
Key to settings: X = Installed, O = Open							

Table 3-2: AM-176 Memory Module Jumper (JP4) Settings Table

Changing Memory SIMMs

To remove a SIMM from its connector:

1. Power down the computer
2. Press out on the metal retainer clips and gently tilt the top of the SIMM module, so it is free of the metal retainer clips.
3. Lift the SIMM out of the connector

Chapter 4 - Configuring the Roadrunner 060

This chapter contains information you may need both before and after installing your Roadrunner 060. It covers:

- Jumpers and connectors on the AM-176 board
- CMOS setup
- Ethernet interface options
- AM-319-20 jumpers
- Remote reset capability
- Installing the SSD chip
- Changing the batteries on the AM-319-20 board
- On-board serial ports
- Front panel status display codes
- UPS monitoring information

We recommend that you safeguard your computer components by insuring that your work area is properly protected against static discharge. For more information, refer to Chapter 3.

AM-176 BOARD AND JUMPER DEFINITION TABLE

Your AM-176 board has been factory tested and shipped with its configuration jumpers set in their standard default positions. There are only two areas on the board which may require you to change jumper settings:

- Memory size select (JP4)
- Enabling or disabling the supply of SCSI bus termination voltage (JP3)—default set at enabled.

The AM-176 board is shown in Figure 4-1 with all of its jumpers in their default positions. (The illustration does not show all components on the board.) The illustration is followed by a jumper configuration table, showing the default setting for each jumper on the board. You may want to check your board and make sure all jumpers are properly installed.

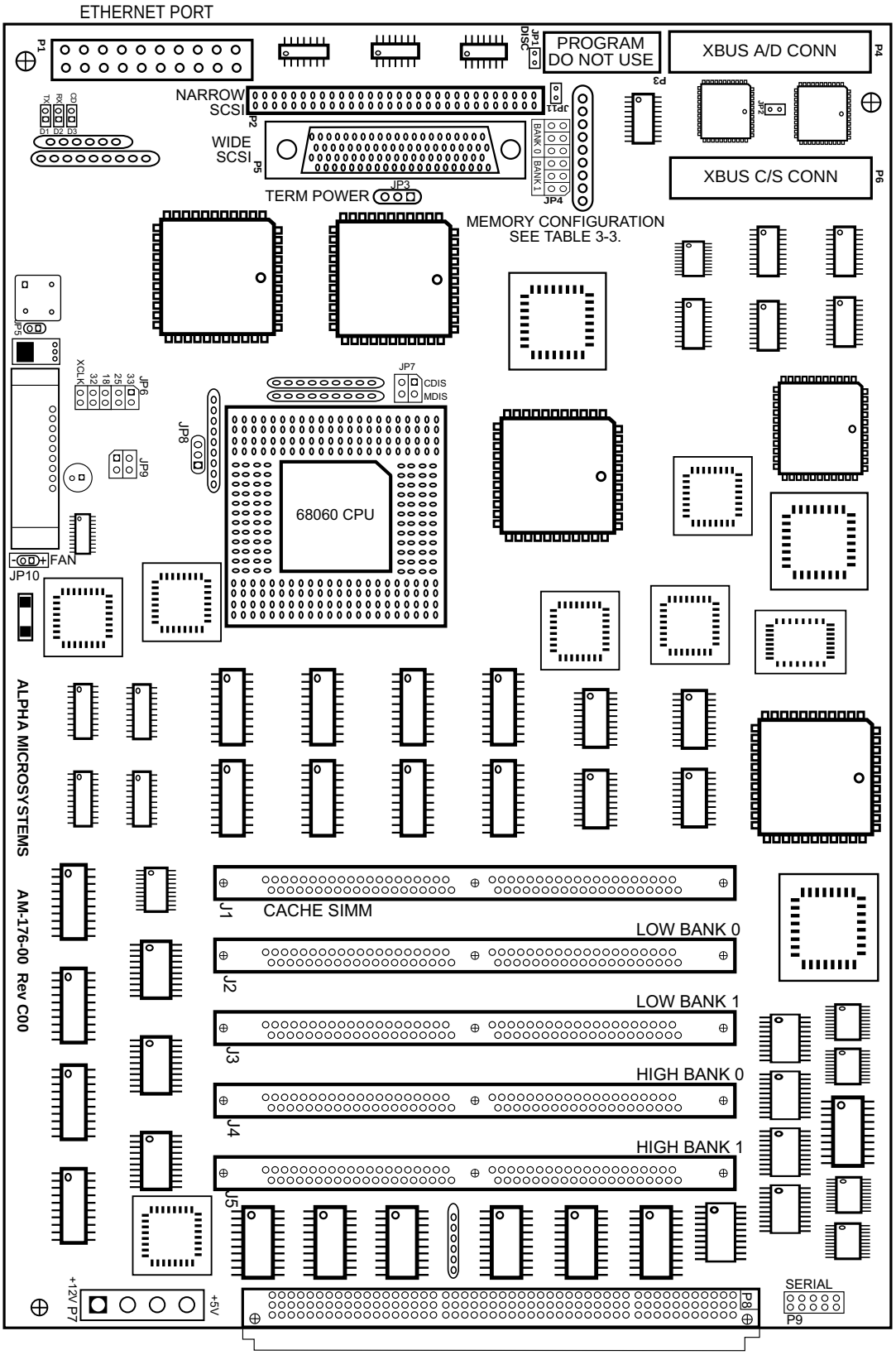

Figure 4-1: AM-176 Board

Jumper Number	*Jumper Name*	*Default Setting*	*Notes*
JP1	DISC	IN	Not user configurable
JP2	XTERM	IN	Not user configurable
JP3	TERMPWR	EN	SCSI bus termination voltage, EN = Enabled, DS = Disabled. User may change.
JP4	Memory Size Select	See Table 3-2	Memory size configuration. USER MUST CONFIGURE
JP5	OSC1	IN	Not user configurable
JP6- 33 JP6 - 25 JP6 - 16 JP6 - 32 JP6 xclk	BUSCLK BUSCLK XCLK XCLK XCLK	IN out out out IN	Not user configurable.
JP7	CDIS MDIS	out out	Not user configurable.
JP8	0 1	out IN	Not user configurable.
JP9	50 66	out IN	Not user configurable.

Table 4-1: Jumper Configuration Table for the AM-176 board

AM-176 CONNECTORS

The following table provides a brief overview of the connectors on the AM-176 board.

Connector Number	*Connector Name*	*Connector Type*	*Cable Description and How to Use*
JP10	Fan	Connector	Plug 12V fan in only. (+) goes on inside, (-) on outside No jumpers.
P1	Ethernet	AUI	Cable pin-1 up, use keyed cable
P2	SCSI-2	50-pin	Cable pin-1 down, use keyed cable
P5	SCSI-2 Wide	68-pin	Cable pin-1 down, use keyed cable
P3	Program	FOR FACTORY USE ONLY	
P4	XBUS	A/D	Cable pin-1 up, use keyed cable
P6	XBUS	C/S	Cable pin-1 up, use keyed cable
P7	Power 4	Keyed Molex connector for +5V and +12V	
P8	QBUS	120-pin DIN	Multi-processor expansion connector; future use
P9	SERIAL	10-pin	Future use

Table 4-2: AM-176 - Connector Description Table

THE CMOS MENU

The Roadrunner 060 does not use boot ID switches; instead it has a CMOS configuration menu to let you choose primary and secondary boot devices, as well as set other system options, such as the system monitor file to use. The CMOS RAM is provided on the AM-319-20 board; it is battery backed up and write-protected for data integrity.

If you are upgrading from a Super Eagle, you are already familiar with the CMOS concept. However, the CMOS menu for the Roadrunner 060 is not the same as on the Super Eagle, so please do not skip this section.

To change the CMOS configuration, you must have a terminal configured for 19.2K baud attached to port 0 on the AM-319-20 system board. This terminal is referred to as the "boot terminal."

Roadrunner 060 Initialization Routine

Before relying on the CMOS parameters, the Roadrunner boot code checks the validity of the CMOS contents by verifying the parameter checksum. If the checksum verifies, the system front panel displays "CS" while it verifies CMOS, and boots using the current CMOS parameters. If you want to change the CMOS parameters, press ESC when the "CS" displays (you have approximately three seconds).

If the CMOS checksum test fails, the front panel will blink "CE" for several seconds, then switch to "CC" while the boot code tests CMOS RAM to ensure that it is working. If the RAM test fails, the boot code displays "CF" on the front panel and the system halts. If this is the case, contact Alpha Micro's Technical Assistance Center.

CMOS Menu Options

The CMOS setup procedure gives you many boot options. Among the CMOS menu options are:

- Setting the SCSI ID of the primary boot device
- Setting the SCSI ID of the alternate boot device
- The boot monitor and initialization file names. These files must be located in account [1,4] of the selected boot device.
- Selecting the network interface type

To enter CMOS Setup, first make sure no one else is using the computer. Then, press the system reset button. When the code "CS" appears on the front display panel, press ESC on the boot terminal to interrupt the boot process and access the CMOS Configuration menu. You have approximately three seconds to press ESC. The CMOS menu looks like this:

```
                    ALPHA MICROSYSTEMS
            AM319-20 CMOS Configuration Menu

        Primary boot device type . . . . . .  SCSI Disk
        Primary boot device unit # . . . . .  0
        Alternate boot device type . . . . .  Streamer
        Alternate boot device unit # . . . .  3
        Boot monitor file name . . . . . . .  AM176 .MON
        Boot initialization file name  . . .  AM176 .INI
        Network interface type . . . . . . .  TPI
        Use [UP] and [DOWN] keys to select an item.
        Use [LEFT] and [RIGHT] keys to change item.
                  Press [ESCAPE] when done.
```

As indicated on the screen, you use the ↑ and ↓ keys to select a parameter. To change a parameter, use the ← and → keys to cycle through its possible settings. The only exceptions are file names, which you type.

The CMOS menu fields are:

- **Primary Boot Device Type** - The type of device to boot from if the attempt to boot from the alternate device fails or no alternate device is selected. Only SCSI and floppy drives can be selected as primary boot devices.
- **Primary Boot Device Unit #** - Which primary drive number to boot from. Valid unit numbers for SCSI drives are the SCSI IDs 0-6 (and 8-15 if you are using the Wide SCSI bus). SCSI ID 7 is reserved for the SCSI controller on the AM-176 board. Valid unit numbers for floppy drives are 0 and 1.

Only Wide SCSI peripheral devices are supported on ports 8 through 15. If you are not using Wide SCSI devices, use only SCSI IDs 0 through 6.

- **Alternate Boot Device Type** - The type of device to attempt to boot from first, before defaulting to the primary boot device. Currently supported alternate boot devices are Floppy, Streamer, DAT and None (boot from primary device only).
- **Alternate Boot Device Unit #** - Which alternate drive number to boot from. Valid unit numbers are SCSI IDs 0-6 for SCSI streamer drives (and 8-15 if you are using the Wide SCSI bus), and 0 or 1 for floppy drives. Always double check the device unit numbers for validity. Remember, you should know how many devices you currently have on the system before you enter this number. If you select a number and the device is not found, the boot process will go to the primary boot selection.
- **Boot Monitor File Name** - The name of the monitor file to be loaded during boot. You may enter any valid file name. The monitor file must have a .MON extension and exist in account [1,4] of the first logical disk of the selected boot device. You can use the backspace and arrow keys when editing this field. If the file name is smaller than 6 characters, the system pads this field with trailing spaces. This parameter is not used when booting from a tape device.
- **Boot Initialization File Name** - The name of the system initialization (INI) file to be used during boot. You may enter any valid file name. The INI file must have an .INI extension and

exist in account [1,4] of the first logical disk of the selected boot device. If the file name is smaller than 6 characters, the system pads this field with trailing spaces.

- **Network Interface Type -** This parameter specifies which Ethernet interface to use on the AM-319-20 board. There are two options: AUI (DB-15) or TPI (RJ-45 or 10BaseT).

If you use the AUI Ethernet interface on the AM-176 board, you do not need to worry about this setting. See the section “Ethernet Ports” in this chapter for more information.

When you are done making changes, press ESC. You will see a message at the bottom of the screen asking if you wish to save any changes made. Type **Y** to save the changes or **N** to abandon any changes made. After you enter your response, the system will boot using whatever parameters have been saved in the CMOS setup.

Important Note

If you want to boot from a physical disk device other than device ID 0:, you should create a disk driver for the selected drive ID and MONGEN it into the monitor. ***You must do this if you want to be able to MONTST using your monitor.*** While a hardware reset will work if the monitor contains the generic SCZR60.DVR, because it reads the drive ID from CMOS, MONTST does not look at the CMOS settings, and so will not know which drive to boot from unless the drive ID is embedded in the monitor.

ETHERNET PORTS

Both the AM-176 and AM-319-20 boards contain Ethernet interfaces: the AM-176 has a 15-pin AUI connector; the AM-319-20 has both AUI and 10BaseT connectors. For best Ethernet and system performance, we recommend you use the Ethernet port on the AM-176 board. The AM-176's high performance Ethernet port can communicate directly with system memory, which greatly increases its performance.

By adding a commercially available transceiver, you can convert the 15-pin AUI port to 10BaseT or 10Base2 "thin" Ethernet operation.

Though you’ll routinely use the Ethernet port on the AM-176, the two ports on the AM-319-20 provide you with built-in back-up Ethernet connections. You cannot use both Ethernet interfaces at the same time.

To use the AM-176’s Ethernet port, you'll need Alpha Micro's networking software, AlphaTCP, which is included with AMOS 2.3A and later. The driver for the AM-176's Ethernet port is only TCP compatible; but ITC tunneling is supported.

For instructions on configuring AMOS to use the AM-176 Ethernet port, please see Chapter 5. Additional information on configuring your networking software and hardware is in the *AlphaTCP Administrator’s Guide*, DSO-00187-00.

In your upgrade kit, you will find two sets of connector clamps. One is for the AUI port on the AM-176 board; the other is for the AUI port on the AM-319-20.

AM-319-20 BOARD CONFIGURATION

The illustration below shows the AM-319-20 board configured as shipped by Alpha Microsystems. There is only one user-configurable jumper on this board, the JP7 Remote Reset jumper. All other jumpers should be left in their factory configured positions.

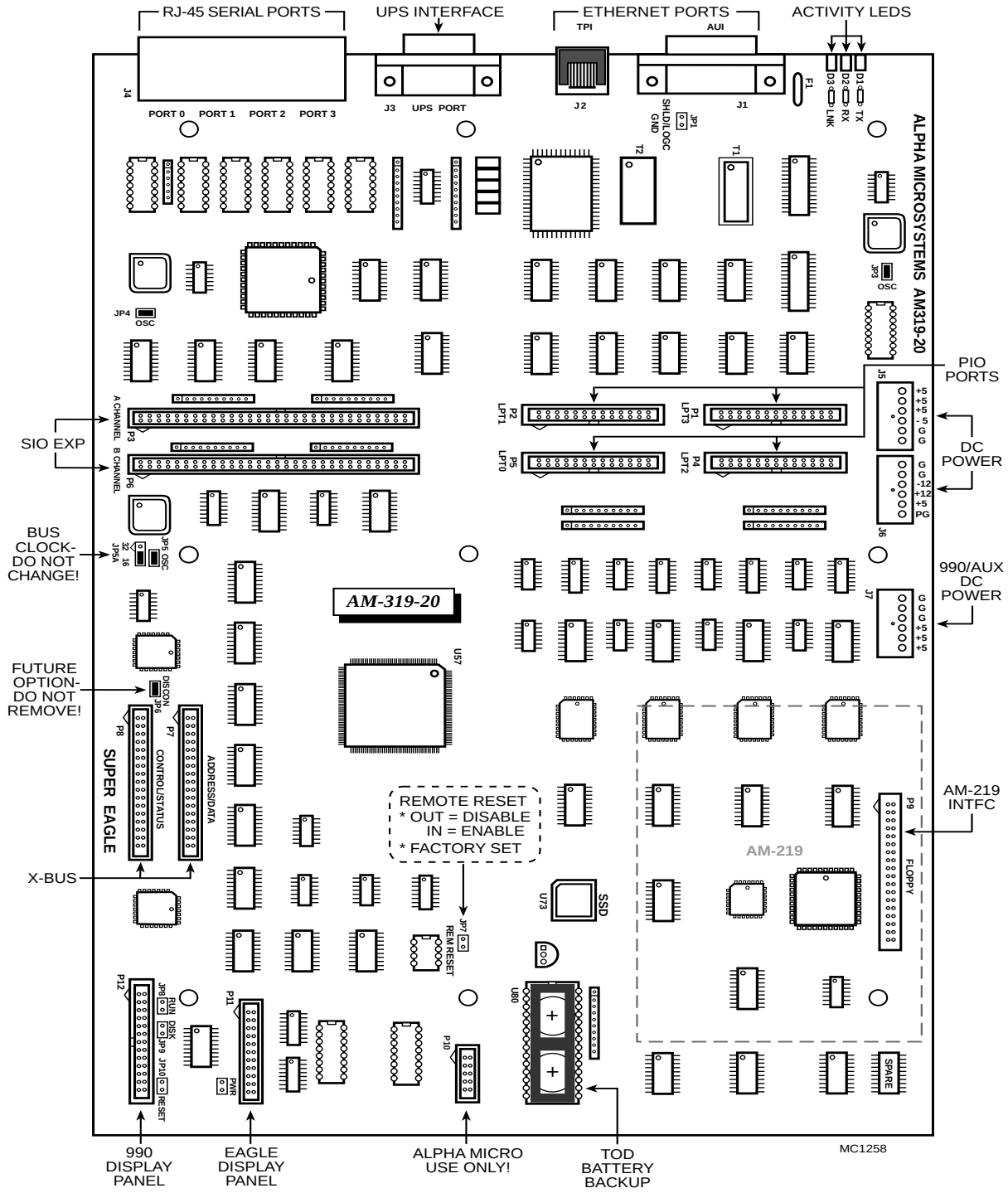

Figure 4-2: AM-319-20 Board Configuration

REMOTE RESET CAPABILITY

The AM-319-20 board has an option to enable the computer's remote hardware reset. To enable remote reset, you must do two things:

1. Install the JP7 jumper, which is shown in the AM-319-20 illustration (Figure 4-2). The factory default is not installed.
2. Connect a push-button switch between pin-1 and pin-7 (signal ground) at the terminal end of the terminal cable attached to serial port 0 on the AM-319-20 board.

Once you've enabled remote reset, you can reset the computer by activating the push-button switch.

INSTALLING THE SSD CHIP

If you are upgrading from an AM-4000 system, it is important to install the new SSD chip (PDB-00014-14), provided in the kit, at location U73 on the AM-319-20 board prior to installation.

Before installing the SSD chip on the AM-319-20 board, write the SSD number in a secure place for future reference. Install the new SSD chip at its clearly marked socket at U73, by inserting and pressing down gently on the chip. Make sure you align pin-1 on the SSD chip with the SSD socket.

SSD chip removal requires a special tool. See the illustration below for more information.

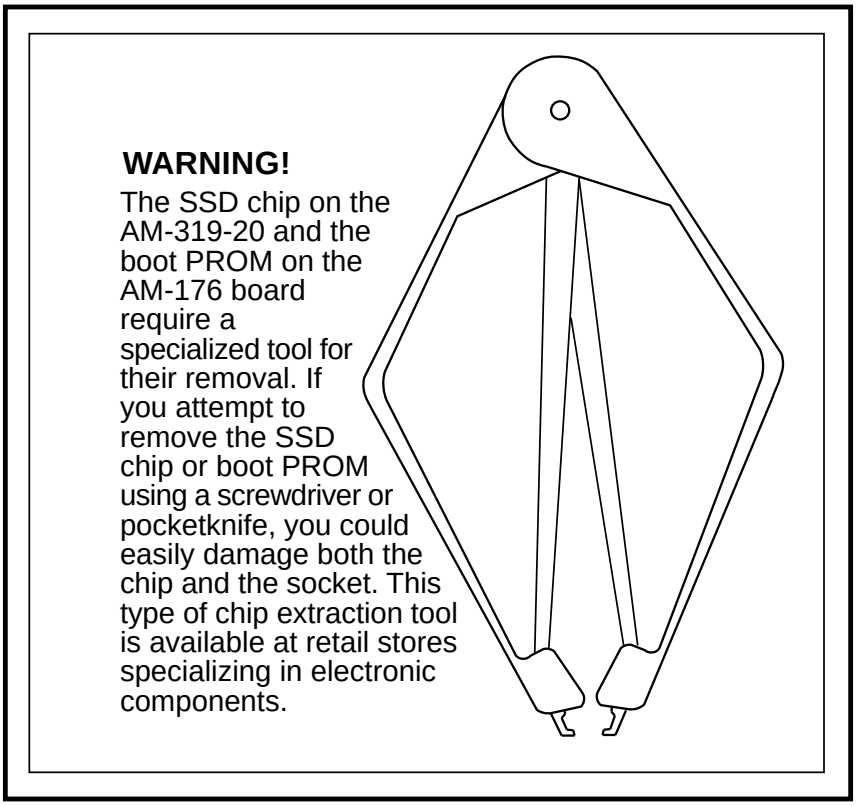

Figure 4-3: SSD Chip Removal Tool

REPLACING THE TIME AND DATE BATTERY

When replacing the backup batteries, always be sure to power-down the system first! DO NOT replace the batteries with the power on! As always when opening your computer chassis, take proper precautions against electrostatic discharge, which can seriously damage system components.

The AM-319-20 board uses two 3-volt lithium batteries (BR-1225) to provide power to its time/date circuit. The batteries are no bigger than a dime (1.2 cm), and are secured side-by-side in a plastic holder at location U80, as shown in the board illustration.

The batteries need to be replaced when the status panel displays B1 or B0. You must replace ***both*** batteries at the same time. For battery replacement, please follow these steps:

Before turning off your computer, make a note of the current CMOS settings. Removing the batteries will erase all CMOS data.

1. Insert a knife with a thin blade (such as a small scribe or Xacto™ knife) from the top, down through the square hole between the right edge of the battery and the plastic holder's top piece. (The right side is the side toward the resistor pack at RN12.)
2. Gently pry the right side of the battery so it slides to the left and pushes against the left side spring contacts.
3. As you slide the battery to the left and it clears the plastic top hole, pry the right edge of the battery upward and out through the hole in the top. The battery will typically "pop" up and out.

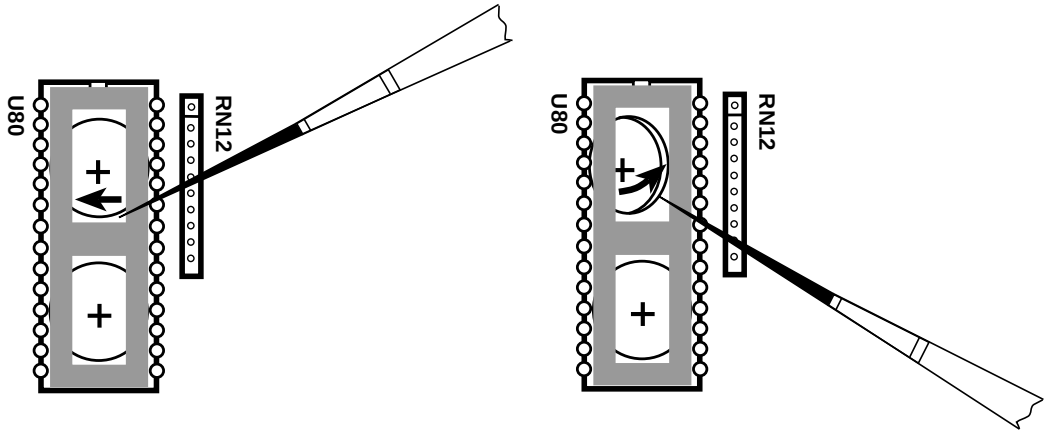

Figure 4-4: AM-319-20 Backup Battery Removal

4. Inspect the battery contacts and be sure they are clean before installing the new batteries. Use alcohol and a cotton swab to clean them, if necessary.
5. To install a new battery, insert the edge of the battery down through the square hole and under the left side of the plastic top. Be sure to install the new batteries with the (+) positive side up.
6. Use your finger to slide the battery to the left and down, until the right edge of the battery slips under the right side of the plastic top. Release the battery and it should spring to the right, securing itself under the holder's top piece.

Restoring Your CMOS Settings

The AM-319-20's batteries also maintain the boot routine data stored in its on-board CMOS chip. Therefore, when you remove and replace the batteries, your CMOS settings will be lost. After you install the new batteries and turn system power on, you need to access the CMOS Configuration menu and restore your settings. Refer to the CMOS Configuration Menu section earlier in this chapter for detailed instructions.

If you do not use the CMOS configuration menu to restore your settings, the system will drop into a standard default boot routine: it will look first for a warm-boot streamer tape on SCSI device ID 3, then for AMOS32.MON and AMOS32.INI on SCSI disk drive 0.

Once the system is up and running, log to OPR: and enter the current time and date. Reboot the system to initialize the system up time.

ON-BOARD SERIAL PORTS

Both the AM-319-20 and the AM-176 contain on-board serial ports:

- The AM-319-20 includes four on-board ports. Port 0 is the system boot port. These are standard, fully functional ports, to which you can attach any supported terminal. When you define these terminals, use the AM318 interface driver, as described in Chapter 5.
- The AM-176 includes one on-board serial port. This port is not supported at this time.

FRONT PANEL STATUS DISPLAY CODES

Your computer includes a two-digit front-panel status display, which can show various codes indicating the state of the system. The table starting on the next page shows all of the defined front panel status codes. Some of these codes will occur only while the computer is booting; others may occur any time the computer is running. If you have a problem with your computer, check the front panel; if there is a code displayed, look it up in this table to help diagnose the problem.

A separate set of codes appears on the front panel during the system self-test. Those codes are listed in the *System Self-test User's Guide*, DSO-00156-00.

Front Panel Status Code	Description
0	Computer is functioning normally.
4	System has gone under 100 queue blocks remaining. This code displays until replaced by another, even if the system now has over 100 queue blocks.
7	LEVEL7 debugger is active. Will only occur when the LEVEL7 software is loaded in system memory. Refer to the LEVEL7 documentation for details.
Steady 8	The computer's internal DC power supply has detected an internal power failure. Contact your VAR.
Flashing 8	UPS low battery condition has existed for more than two minutes. The system has executed a shutdown procedure. Write-caching is deactivated on any disk drives which had it enabled. The system is now in a HALT condition until the batteries in the UPS are completely dead. Turn off system power! To reset this condition, you must get the UPS primary power back on line. Check the UPS input power breaker and be sure it's ON! The system must be rebooted with a hardware reset.
9	Memory parity error was encountered.
10	An interface driver (.IDV) defined in a TRMDEF statement in the system initialization file was not found in account [1,6] on the boot device.
11	A terminal driver (.TDV) defined in a TRMDEF statement in the system initialization file was not found in account [1,6] on the boot device.
12	AMOS system initialization (.INI) file not found.
20	The computer is beginning to execute the boot PROM. An error at this point indicates your computer has a faulty PROM. Contact your VAR.
21	The computer is transferring the instructions from the PROM into its Random Access Memory (RAM). If an error occurs here, your computer might have a bad PROM or bad memory. Contact your VAR.
22	The computer is generating a checksum of the instructions in Random Access Memory. If this calculated checksum does not match the checksum coded into the instructions themselves, you see a 2E error code.
23	Initializing the alternate boot device. If the boot stops at this point, it may indicate a hardware problem with the alternate boot device. When you are booting from a disk, this code might remain on the display for a short time after you've turned the power on, while the disk drive spins up to operating speed.
24	Reading the Master File Directory (MFD) from disk. An error at this point indicates disk problems in the alternate boot device.

Table 4-3: Front Panel Status Codes

Front Panel Status Code	Description
25	Searching for the User File Directory (UFD) account [1,2] on the alternate boot device.
26	Searching for a BADBLK.SYS file on the alternate boot device. Valid only on disk drives that use a BADBLK.SYS file.
27	Loading BADBLK.SYS on the alternate boot device. Valid only on disk drives that use a BADBLK.SYS file
28	Searching for account DSK0:[1,4] on the alternate boot device. An error at this point may indicate disk problems. Try reloading the latest version of the system software.
29	If you are ***booting from a disk drive***, the computer is looking for the AMOS monitor file in DSK0:[1,4] on the alternate boot device. If this file is missing, reload the latest version of the system software. If you are ***booting from a tape device***, the computer is searching for a label block on the tape, as the alternate boot device.
2A	Loading the AMOS monitor from the alternate boot device. If an error occurs at this point, try reloading the latest version of the system software.
2b	Beginning to execute the AMOS monitor program from the alternate boot device. If an error occurs at this point, try reloading the latest version of the system software.
2d	Bootup from the alternate boot device failed because of a time-out error. This may indicate a faulty memory or an addressing problem.
2E	Bootup from the alternate boot device failed because of a bootstrap loader program checksum error. This may indicate a bad PROM or bad memory.
2F	Bootup from the alternate boot device failed because of an invalid boot device selection. Access the CMOS setup routine by pressing Reset, then pressing the ESC key when the code "CS" appears on the front panel. Verify the device and unit number settings on the CMOS menu.
33	***While booting:*** initializing the primary boot device. If the boot stops at this point, it may indicate a hardware problem with the primary boot device. When you are booting from a disk, this code may remain on the display for a short time after you've turned the power on, while the disk drive spins up to operating speed.
33	***During normal operation:*** unimplemented EA encountered.
34	***While booting:*** reading the Master File Directory (MFD) from the primary boot device. An error at this point indicates disk problems.

Front Panel Status Codes (continued)

Front Panel Status Code	Description
34	***During normal operation:*** unimplemented Integer instruction encountered.
35	Searching for the User File Directory (UFD) account [1,2] on the primary boot device.
36	Searching for a BADBLK.SYS file on the primary boot device. Valid only on disk drives that use a BADBLK.SYS file.
37	Loading BADBLK.SYS on the primary boot device. Valid only on disk drives that use a BADBLK.SYS file
38	Searching for account DSK0:[1,4] on the primary boot device. An error at this point may indicate disk problems. Try reloading the latest version of the system software.
39	If you are ***booting from the hard drive (DSK0)***, this code indicates the computer is looking for the system monitor file in DSK0:[1,4] as the primary boot device. If this file is missing, reload the latest version of the system software.
39	If you are ***booting from a tape device***, this code indicates the computer is searching for a label block on the tape as the primary boot device.
3A	Loading the AMOS monitor from the primary boot device. If an error occurs at this point, try reloading the latest version of the system software.
3b	Beginning to execute the AMOS monitor from the primary boot device. If an error occurs at this point, try reloading the latest version of the system software.
3F	Bootup failed because of an invalid primary boot device selection. Access the CMOS setup routine by pressing Reset , then pressing the ESC key when the code "CS" appears on the front panel. Verify the device and unit number settings on the CMOS menu.
40	UPS inverter on. Normal operation recovering from an AC power failure. Only displays if the UPS status cable is installed on the UPS port.
41	UPS is bypassed. System running without UPS battery protection. Please turn on UPS run switch.
42	UPS inverter on, AC power failure detected, and the system is running off batteries. This status is updated every second that the AC power is off..
43	Not valid, system inoperative.
44	UPS is on, and batteries are low. Batteries are recharging, please check.
45	UPS is bypassed and batteries are low.

Front Panel Status Codes (continued)

Front Panel Status Code	Description
46	UPS inverter is running and a low battery condition exists. Only **2 minutes of power remaining!** System shutdown is imminent.
47	Not valid, system dead.
48	An internal fault has been detected in the UPS.
49	An internal fault has occurred in the UPS and it is in bypass.
4A - 4E	Not valid.
4F	UPS cable has been unplugged from UPS port.
88	Trying to execute an unimplemented (Monitor) SVCA call.
95	Logger CREATE error.
96	Logger CLOSE error.
97	Logger FILOTX error.
98	Logger OPENA error.
99	Logger semaphore not available.
B0	CMOS batteries need to be replaced. Data that was stored in CMOS RAM is not guaranteed.
B1	The battery voltage dropped temporarily (i.e., after replacing the batteries). The initial CMOS parameters are not guaranteed. Access the CMOS setup routine by pressing Reset, then pressing the ESC key when the code "CS" appears on the front panel. Re-enter CMOS settings.
CC	The computer is testing the CMOS RAM for proper operation after detecting a CMOS checksum error.
CE	CMOS parameter checksum error. This code will flash on the front panel for several seconds.
CF	CMOS RAM failure. The system is going into a halt state. Contact your dealer or the Alpha Micro Technical Assistance Center.
CS	Do you want to enter CMOS setup? You have three seconds to press the ESC key on the boot terminal, which must be set at 19200 baud.
D0	Tried all three timer chips and all failed.
EF	System has detected an attempt to write outside of the supervisor stack area.
F	On boot-up, memory is being cleared and sized.

Front Panel Status Codes (continued)

Front Panel Status Code	Description
F0	Bus error was encountered.
F1	Address error was encountered.
F2	Illegal instruction was encountered.
F4	CHK instruction.
F5	TRAPV instruction.
F6	Privilege violation.
F7	TRACE return.
F8	Coprocessor protocol violation.
F9	EM1111.
FA	FPCP branch or set on unordered condition, or FPCP inexact result, or FPCP divide by zero, or FPCP underflow, or FPCP operand error, or FPCP overflow, or FPCP signaling NAN, or FPCP unimplemented data type.

Front Panel Status Codes (continued)

SERIAL UPS MONITORING

With an Alpha Micro UPS (Uninterruptible Power Source) and the related UPS Monitoring Software (Version 1.3(176) or later) installed, you can monitor the UPS from any terminal on the system. If any problem arises, you can check the front panel status code (see Table 4-3).

You can find information about the configuration and use of the UPS monitoring software in the *UPS Monitor Software User's Guide*, DSS-10394-00.

If you are using the AM-176's write buffering feature described in Appendix B, the system monitor has a feature you should be aware of. To help prevent possible data loss, the write buffer will be flushed and disabled if a low battery condition is detected by the system monitor via the AM-319-20's on-board UPS status port. However, this feature is not available when the Level 7 software is actively loaded in the system's initialization (INI) file.

Chapter 5 - Beginning a Roadrunner 060 Upgrade

When you upgrade your computer to a Roadrunner 060, it’s important that you perform the proper hardware and software steps in the correct order, taking all the necessary precautions to protect your data in case of a problem. Here is a brief summary of the steps you must follow to complete your upgrade:

1. Safeguard your data by performing a complete backup and preparing and testing a warm boot tape.
2. As necessary, update all circuit boards in the computer to meet the minimum revision requirements for the Roadrunner 060. Replace unsupported boards and peripherals.
3. Install the correct version of AMOS, following the instructions detailed in the appropriate *AMOS Release Notes*.
4. Use MONGEN to create a new monitor file, called AM176.MON, for the AM176 board.
5. Use FIXLOG to create new disk drivers for any subsystem disks.
6. Create a new initialization file for the Roadrunner 060, called AM176.INI.
7. If your computer is on a network, modify the network configuration file.
8. Backup DSK0: and prepare and test a warm boot tape.
9. Install the Roadrunner 060 hardware.
10. Turn the computer back on and perform self-test.
11. Set your CMOS Configuration options to match the new system hardware and software.
12. Boot up your system. Ensure that all peripherals are working correctly.

The rest of this chapter describes steps 1 - 8, then tells you where to look in this manual for instructions on step 9. Steps 10 - 12 are covered in Chapter 6.

ELECTRONIC EQUIPMENT HANDLING PRECAUTIONS

While your computer's hardware is exposed and the AC power cord is unplugged, the components are vulnerable to damage caused by static discharge. Your body and clothing are capable of storing an electrical charge that can damage or destroy unprotected electronic components. Before you handle any computer hardware, make certain your work area is properly protected against static discharge. There are a number of commercially available static protection devices, like the wrist strap shown in Chapter 3, designed specifically to protect your equipment from harmful static discharge.

STEP 1 - PROTECTING YOUR DATA

Perform a Complete Back Up

When doing a major upgrade to a computer, you want to be absolutely sure you have a recent and complete system backup. Although it is very unlikely that data stored on your hard disk drive would be corrupted when upgrading your computer, you should be prepared for anything. **Before you loosen the first screw or download any new software, make sure all your data is copied onto some form of backup media.** Make certain you are able to read the backed-up data; be absolutely sure it is both readable and restorable.

Create a Warm Boot Tape

A warm boot tape allows you to boot the computer when you cannot do so from the hard disk drive. When doing a Roadrunner 060 upgrade, you'll be updating your system software, modifying the system initialization command file, and using the MONGEN program to embed a new driver in your AMOS monitor. A mistake during any of these operations could result in a computer that won't boot. If you have a properly prepared warm boot tape, you will be able to restore the computer and correct the problem. Without such a tape, it is extremely difficult to access the computer and correct the problem. See the WRMGEN sheet in the *Systems Command Reference Manual* for information on how to create a warm boot monitor and a bootable tape.

Booting From a Floppy Drive

If your computer includes a floppy drive, it can be configured as a boot device. A floppy drive makes an excellent alternate boot device and may prove invaluable should your hard disk drive fail to boot.

To boot from a diskette, you must change the CMOS configuration, selecting the floppy drive as the boot device. The floppy drive can be configured as either the main or alternate boot device. Even though the entire AMOS release will not fit on a single diskette, you can create a bootable diskette by copying only files essential for booting and minimal operation onto it. Once you have copied the necessary files onto the diskette, use the MONGEN program to create a bootable monitor on the floppy diskette. AMOS contains a special driver designed for making bootable diskettes using the MONGEN program:

1. To create a compatible disk driver for the AM-219 controller, use the FIX219 program. You must use the latest 219DVR.DVR to create the system monitor file. See the FIX219 sheet in the *System Commands Reference Manual* for more details.
2. Save the driver to disk.
3. Once the driver is saved, create a monitor with this driver embedded.
4. Save the monitor, along with the system initialization file, and other necessary system files, to a diskette.

If you are creating a bootable floppy disk to use with the Roadrunner 060, you must include the file ISP.SYS. This file is not needed for bootable diskettes used on earlier CPUs.

Don't forget that you must update the system initialization command file on the diskette to designate the floppy drive as the boot device.

STEP 2 - UPGRADE CIRCUIT BOARDS AND PERIPHERALS

Chapter 2 contains lists of Alpha Micro hardware which is and isn't supported with the Roadrunner 060. Make sure the boards which will stay in your computer after the upgrade are updated to at least the minimum necessary revision levels.

For peripherals which need to be replaced, we recommend you install the new peripherals before beginning the Roadrunner 060 upgrade. This lets you make sure the new equipment is working properly before you add the extra variables of new software and a new CPU.

STEP 3 - INSTALL THE CORRECT VERSION OF AMOS

The Roadrunner 060 is compatible only with AMOS 2.3A and later. Make sure your computer is using a version of AMOS which will work with your new hardware. If you do need to install a new version of AMOS, do it now, on your existing CPU, before upgrading your hardware. Follow the instructions in the *AMOS Release Notes* and make sure all parts of your system are working properly using the new software before you continue.

To insure all aspects of your system are running properly under the new operating system, we strongly recommend that you wait to perform the hardware upgrade and run your system as usual for a few days.

STEP 4 - CREATE A NEW SYSTEM MONITOR

Because of the Roadrunner 060's CMOS configuration, you can give the system monitor file any name you want. In this step, you use MONGEN to create a monitor called AM176.MON, containing the SCZR60 disk driver. For example:

```
LOG SYS: RETURN
MONGEN RETURN

Input monitor name: AMOS.MON RETURN
New disk driver: SCZR60.DVR RETURN
New language definition table name: ENGLSH RETURN
New monitor name: AM176.MON RETURN

SAVE AM176.MON RETURN
```

This is only an example; be sure to choose the correct language definition table for your installation. All other entries shown are correct for the Roadrunner 060.

If the disk drive you will boot form is not at SCSI ID 0, use FIXLOG to create a disk driver for the correct SCSI ID and use that driver during MONGEN instead of the generic SCZR60.DVR. Otherwise, you will not be able to MONTST using the new monitor.

STEP 5 - CREATE A NEW SYSTEM INITIALIZATION FILE

You need to make several changes to your system initialization (INI) file so the computer will boot correctly after you've installed the Roadrunner 060 hardware. As with the monitor file, the CMOS configuration lets you call this file anything you want (with an .INI extension). The steps below create an initialization file called AM176.INI.

These instructions have you make a copy of your system initialization file (AMOS32.INI), then modify the copy. Never modify your system INI file directly, as mistakes in the INI file could keep your computer from booting!

1. Copy your system initialization file to AM176.INI. Type:

   ```
   LOG SYS: ENTER
   COPY AM176.INI=AMOS32.INI ENTER
   ```

   Edit the AM176 .INI file.

2. If you are upgrading from an AM-4000, update the TRMDEF statements for the ports which will now be attached to the AM-319-20 board. It's especially important to change port 0 (the boot terminal). You must change the interface driver name to AM318, the driver used by the ports on the AM-319-20. For example:

   ```
   TRMDEF TRMN,AM318=0:19200,AM62A,100,100,100
   ```

   If you are upgrading from a Super Eagle, these terminal definitions should already be correct; check to make sure.

3. The high performance features of the AM-176 board require more queue blocks. To determine your new queue block requirement, use the following formula:

   New Queue Block Requirement = Old Queue Blocks + (13 X Number of Jobs)

   For example, if the QUEUE statement in your system initialization command file is currently set to 200 and the JOBS statement is set to 50, the resulting formula would look like this:

   New Queue Block Requirement = 200 + (13 x 50)

This example results in a setting of 850 queue blocks. However, we strongly recommend that you use a minimum a 2,500 queue blocks, even if the formula results in a lower number.

4. Since you will be booting from a SCSI disk drive connected to the AM-176 board, you need to define the SCSI dispatcher for the Roadrunner 060 (described in Chapter 3) in the system initialization command file. Add this command to the INI file **after** the JOBALC statements, but **before** the first DEVTBL statement:

   ```
   SCZDSP SCZR60
   ```

   For example:

```
:T
JOBS 1
JOBALC JOB1
;
TRMDEF TERM1,AM318=0:19200,AM62A,100,100,100,EDITOR=15
VER
SCZDSP SCZR60.SYS
;
DEVTBL DSK1,DSK2
```

The SCR60 dispatcher supports several option switches, as shown in the following table:

Switch	Description
/EW	Enable Wide SCSI negotiation for all devices
/EW:{id#}	Enable Wide SCSI negotiation for SCSI device ***ID#***
/NQ	Disable Command Queuing for all devices
/NQ:{id#}	Disable Command Queuing for SCSI device ***ID#***
/NS	Disable Synchronous Negotiation for all devices
/NS:{id#}	Disable Synchronous Negotiation for SCSI device ***ID#***
/NP	Disable Parity Checking (Parity still generated) on all devices

Table 5-1: Dispatcher Switch Table

The most common of these switches is /EW, to enable Wide SCSI operation when using the optional Wide SCSI bus. For example, if you have the Wide SCSI cabling option installed and a Wide SCSI disk drive at ID 0 of the wide bus, and non-wide devices at other IDs, enter this statement to enable Wide SCSI operation for just that drive:

```
SCZDSP SCZR60/EW:0
```

If you have both Wide and narrow SCSI devices attached to the wide bus, enable Wide SCSI operation only for the wide devices. Use /EW without a device ID (to enable wide operation for the entire bus) only if all devices on the bus, both disk and tape drives, are Wide SCSI devices.

Do not use the /EW switch with the narrow SCSI bus, even if you have Wide SCSI devices attached to the bus using the appropriate adapters.

5. If you are upgrading from an AM-4000, modify the DEVTBL to identify the printer port you will be using:

```
DEVTBL /SEP0
```

If you are installing multiple printers, add the following DEVTBL statement:

```
DEVTBL /SEP0,SEP1,SEP2,SEP3
```

To load SEP.DVR into system memory, add the following statement to the SYSTEM area:

```
SYSTEM DVR:SEP.DVR
```

6. In the system area of AM176.INI, add a line to load the network driver for the appropriate Ethernet interface.

   If you are using the AUI port on the AM-176 board, which we recommend, use this statement:

   ```
   SYSTEM DVR:AM176.LDV/N
   ```

   If you are using the AUI or TPI port on the AM-319-20, use this statement:

   ```
   SYSTEM DVR:AM319S.LDV/N
   ```

The AM-176's high performance SCSI port supports write buffering for SCSI hard disk drives. If you want to use this feature, please read the information in Appendix B before continuing. You may need to make additional changes to your initialization file.

7. Save and exit from AM176.INI after making your changes.

STEP 6 - CREATE NEW SUBSYSTEM DISK DRIVERS

In step 5, you created a new disk driver for your DSK device and embedded it in a new system monitor. If you have any non-DSK disk devices (subsystem disks), you also need to create new drivers for them.

To create the new drivers, use the FIXLOG command. See the FIXLOG sheet in the *AMOS System Commands Reference Manual* for instructions.

The AM-176's high performance SCSI port supports write buffering for SCSI hard disk drives. If you want to use this feature, please read the information in Appendix B before continuing. It will affect the choices you make while using FIXLOG.

After creating the new disk drivers, be sure to save them to disk.

STEP 7 - NETWORK CONFIGURATION

In step 6, you changed a SYSTEM statement in the AM176.INI file to load the correct network interface driver for the Roadrunner 060 Ethernet port you will be using. You must make the same change to the AlphaTCP configuration file, CONFIG. To do this:

1. Log to TCP:.
2. Edit the CONFIG. File.
3. Change the IFCONFIG statement to AM176.LDV if you will be using the Ethernet port on the AM-176, as recommended. If for some reason you will use the port on the AM-319-20, this statement should specify AM319S.LDV.
4. Save the file after making these changes.

STEP 8 - PROTECT YOUR DATA AGAIN

Now that you've installed a new operating system, you should make a complete backup of DSK0:, and create a new warm boot tape and/or bootable floppy disk. That way, in the unlikely event that you do have to warm boot and restore your disk drive, you won't have to repeat the installation of the new operating system.

If you have an available logical disk device, you can copy DSK0: to it rather than making a backup tape.

STEP 9 - INSTALL THE ROADRUNNER 060 HARDWARE

Obviously, the hardware installation procedure differs depending on the chassis and the type of system you are upgrading from: AM-4000 or Super Eagle. Each chassis/system type has its own set of instructions. Please turn to the correct appendix for your upgrade:

- AM-4000M or AM-4000 VME 6-slot in a pedestal chassis — Appendix C
- AM-4000 VME 10-slot or 21-slot in a rack mount chassis — Appendix D
- AM-4000M or AM-4000-06 VME in an AM-990 chassis — Appendix E
- AM-4000-10 VME in an AM-990 double-wide (jumbo) chassis — Appendix E
- Super Eagle in deskside chassis — Appendix F
- Super Eagle in an AM-990 chassis — Appendix G
- Super Eagle in an AM-990 double-wide (jumbo) chassis — Appendix G

Chapter 6 - Testing the New System

After you've installed the new hardware, you need to test the system to make sure it works properly in its new configuration. To do so:

1. Run self-test.
2. If the system passes the self-test, access the CMOS Configuration menu to define your configuration, then boot the computer. Make sure it boots correctly with your new configuration.
3. Rename your new system monitor and initialization files.
4. Back up the entire system and make a new warm boot tape.

The sections below give more information on each step.

RUNNING A SELF-TEST

Once you have completed the hardware installation, run the Self Test program to make sure each subsystem is functional. The self test diagnostics are incorporated into the boot PROMs on the AM-176. Refer to the *System Self Test User's Guide*, DSO-00156-00, for more information.

To begin the self-test procedure, hold the reset button and turn on the computer. When the front panel displays "56", press [SPACE] on the boot terminal. The CPU will output the results of the self-test to that terminal.

If any problem arises, contact your dealer or the Alpha Micro Technical Assistance Center.

SET YOUR CMOS CONFIGURATION AND BOOT

Once you have completed the self test, press the reset button and access the CMOS Configuration menu, as described in Chapter 4. After setting the correct monitor and initialization file names (AM176.MON and AM176.INI), save your configuration and the system will reboot itself.

As the computer boots, watch the boot terminal for error messages. After the computer finishes booting, at the AMOS prompt, type:

SYSTAT [RETURN]

Check the system status information displayed by the SYSTAT program and insure all disks are accessible and all jobs are up and running—terminals, printers, task manager, network jobs, etc.

To check on the status of all jobs, we recommend that you type:

STAT [RETURN]

RENAMING THE SYSTEM MONITOR AND INITIALIZATION FILES

Once the system has passed the self-test and you have made sure that all jobs are up and running:

1. Make archive copies of your previous monitor and initialization files. For example:

```
LOG SYS:
COPY OLDMON.MON=AMOS32.MON
COPY OLDINI.INI=AMOS32.INI
```

2. Rename the AM176.MON and AM176.INI files to AMOS32.MON and AMOS32.INI:

```
COPY AMOS32.MON=AM176.MON
COPY AMOS32.INI=AM176.INI
```

3. Access the CMOS Configuration menu and change its settings to reflect the new monitor and initialization file names. See Chapter 4 for a description of CMOS Configuration.

BACK UP AND MAKE A NEW WARM BOOT TAPE

Now that you've finished the upgrade installation, you need to safeguard your data in the new configuration. Use your normal backup procedure to make and verify a complete system backup, as discussed in Chapter 5. Then, create and test a new warm boot tape (and/or bootable diskette) which reflects the new system configuration.

If you do not back up your system and make a good warm boot tape, you risk losing your data and/or having to repeat large portions of the upgrade procedure!

If you are creating a bootable floppy disk to use with the Roadrunner 060, you must include the file ISP.SYS. This file is not needed for bootable diskettes used on earlier CPUs.

ADDITIONAL DOCUMENTATION

For additional hardware information, refer to the following:

- *System Self Test User's Guide*, DSM-00156-02.
- *Alpha Micro Installation and Planning Guide*, DSM-00034-00.

For additional software information, refer to the following:

- *AMOS System Operator's Guide*, DSM-00001-03.
- *AMOS System Commands Reference Manual*, DSM-00043-04.
- The *Release Notes* for your version of AMOS

Appendix A - SCSI Termination

SCSI TERMINATION USING EXTERNAL TERMINATOR OPTION

The preferred method of terminating the SCSI bus in an AMOS based computer is the installation of an external terminator. In April 1993, the external SCSI bus terminator became standard on all AMOS computers. Using an external terminator makes installing an add-on subsystem (like a portable CD-ROM drive) easier, eliminating the need to remove terminators from a SCSI device located in the host computer. In the Roadrunner 060, the external terminator ***must be*** an “active” terminator. An active terminator is included in the Roadrunner 060 mounting kit. Do not continue to use the passive terminator from your earlier system after you upgrade to the Roadrunner 060.

The AM-176 board is sensitive to incorrect SCSI bus termination. If you are using the external terminator and one of the SCSI devices inside the computer also has its terminators installed, you will experience problems.

The SCSI bus must be terminated at each end of the cable. The AM-176 terminates one end of the bus. The other end must be terminated by an active style external terminator. An active terminator for the narrow SCSI bus (PRA-00222-21) is included in the Roadrunner 060 mounting kit; an active terminator for the Wide SCSI bus (PRA-00222-20) is included in the Wide SCSI option kit.

To use the external terminator, make sure none of the SCSI peripherals inside the computer are terminated. The termination power for the SCSI bus is provided by the AM-176 board.

The external terminator is shown in Figure A-1:

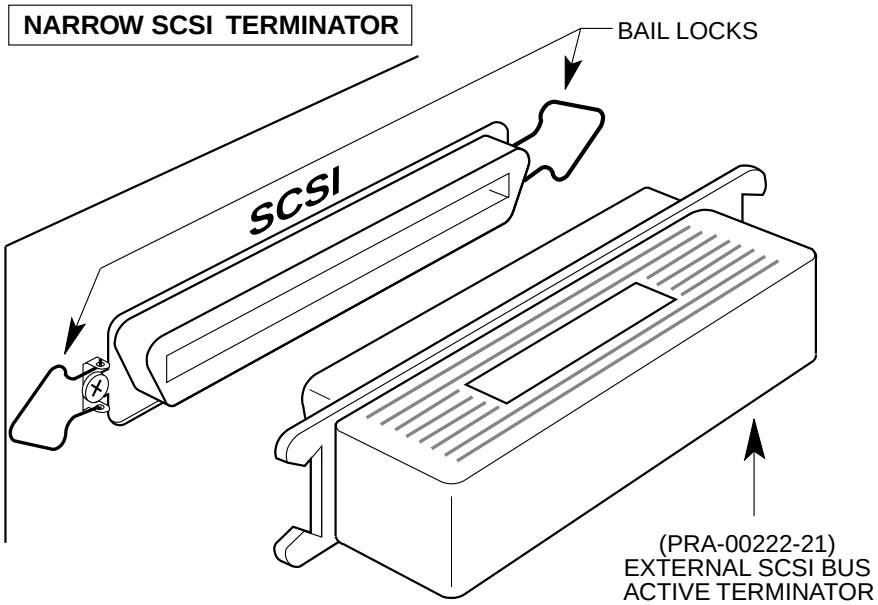

Figure A-1: Active External Terminator Installation

Figure A-1 shows an extended active external narrow SCSI connector and bail locks for holding the terminator in place. This configuration is used on almost all of Alpha Micro's currently available product. The terminator is installed by sliding it over the connector and then latching the bail locks into the notches in the terminator.

ATTACHING EXTERNAL DEVICES

To attach an external SCSI device, you must remove the terminator from the external SCSI port. However, you ***must*** make sure the SCSI bus is still terminated at both ends. To do so, install the external active terminator in the unused SCSI I/O port of the external SCSI device.

Attaching an external narrow SCSI device, such as a CD-ROM drive, to a system using the Wide SCSI bus is a special case. You must make sure all 16 lines of the Wide SCSI bus are properly terminated. To do so:

1. Use an external wide to narrow SCSI cable which actively terminates the “high” nine lines of the Wide SCSI bus. Alpha Micro offers this cable in both three foot and six foot lengths (PDB-00440-80 and PDB-00440-81).
2. Plug the narrow active external terminator provided with your Roadrunner mounting kit (PRA-00222-21) into the unused SCSI I/O port of the external device. This terminates the “low” half of the SCSI bus.

Notice that, in this configuration, the Wide SCSI active external terminator (PRA-00222-20), which is normally plugged into the external SCSI port, is not used.

TERMINATOR POWER

For information on how to configure terminator power, see the following documents:

- *SCSI Disk Drives Installation Instructions*, PDI-00436-20, revision A12 or later.
- *AM-625/626/627 SCSI 1/4" Streaming Tape Drive Installation Instructions*, PDI-00625-00, revision A05 or later.
- *AM-647 DAT Tape Drive Installation Instructions*, PDI-00647-00, revision A02 or later.
- The configuration document accompanying your disk drive.

Appendix B - Read-Ahead and Write Buffering

INTRODUCTION

Earlier AMOS systems achieved high levels of performance by using an intelligent disk controller (such as the AM-520) to offload a large portion of the CPU overhead associated with disk access. A benefit of this offloading is that extra cycles are available on the controller to perform functions such as read-ahead and write buffering. Both of these schemes are used by the current AM-520 firmware, but cannot be used on other non-intelligent interfaces such as the Alpha Micro SASI interface because the main processor running AMOS has to control the SASI interface, stealing CPU cycles away from other resources, such as the terminal service system and user jobs.

The AM-176 board uses a programmable RISC DMA controller for SCSI bus communications and for data transfer to and from the AM-176's SCSI bus. The 68060 CPU is only involved with setup before and cleanup after a SCSI command is sent to a device—the rest of the command, including data transfer, is handled by the RISC processor.

Having the RISC processor take care of these details allows both read-ahead and write buffering without the need for a separate controller. Also, fast SCSI-2 disk drives will give better performance than an AM-520 using ESDI drives for the following reasons:

- Physically, SCSI-2 drives are faster than all ESDI drives. They spin the platters twice as fast (reducing latency) and have significantly faster seek times.
- Data transfer rates are higher with fast SCSI-2 drives. ESDI drives have a maximum transfer rate of 2.25MB/s, whereas fast SCSI-2 drives transfer data at 10MB/s (or around 4 times faster). Wide SCSI has a maximum transfer rate of 20MB/s.
- The data transfer path is much faster with the RISC SCSI-2 controller. It is able to read from or write to system memory 32 bits at a time, taking 120ns per read or write. The AM-520 transfers data 16 bits at a time, taking 210ns per 16-bit transfer (or 420ns per 32-bit transfer).

READ-AHEAD

The AM-176's SCSI disk driver, SCZR60.DVR, is able to perform read-ahead directly into the AMOS (DCACHE) disk cache. When any program attempts to read a physical block from a disk, the SCZR60 driver will also read up to an additional seven sequential blocks from the disk drive and store these read-ahead blocks in the cache.

This read-ahead scheme works very well when jobs on the system are doing a large number of sequential reads. For example, data base searches and programs like REDALL may execute much faster because the data they require is already in memory and only has to be transferred from the cache into the user partition.

Programs that do significant random disk access (such as RNDRED) tend to slow down with this read-ahead scheme. Most of the slowdown is caused by "thrashing" of the disk cache, where cache entries that will be used again are removed from the cache due to the allocation requirements of the read-ahead blocks (which typically are never used). The actual data transfer overhead is very little, as most SCSI disk drives (especially fast SCSI-2 drives) have a track cache built into the drive allowing both the target and read-ahead blocks to be transferred over the SCSI cable without delay.

Controlling Read-Ahead

For read-ahead to occur on the AM-176, both the AMOS disk cache (DCACHE.SYS) and the full SCSI dispatcher (SCZR60.SYS) must be installed. The number of read-ahead blocks to be transferred into cache on every physical disk read is contained in the disk driver. This can be set when using the FIXLOG program to generate a disk driver with the appropriate read-ahead blocking factor.

When you use FIXLOG to create a driver for the AM-176 board, you are asked to specify the number of read-ahead blocks. For example, type:

```
FIXLOG [RETURN]
FIXLOG.LIT Version x.x(xxx)

1. Change the number of logicals.
2. Create a sub-system driver.

Enter choice: 2 [RETURN]

Enter name of generic driver to be used: SCZR60 [RETURN]
Enter number of logical units per physical unit: 10 [RETURN]
Enter SCSI id (0-6): 0 [RETURN]
Enter number of read-ahead blocks (0-7): 5 [RETURN]
Enter new driver name: DSK [RETURN]
New driver is now in memory.
```

To save the driver you have created, type:

```
SAVE DSK.DVR [RETURN]
```

If you wish to disable or change the number of read-ahead blocks, simply use FIXLOG to generate a new disk driver. If the disk driver is for the DSK: device, don't forget to use MONGEN and embed the new driver into the system monitor.

The generic AM-176 SCSI disk driver (SCZR60.DVR) is set up for seven read-ahead blocks.

WRITE BUFFERING

AMOS (and therefore every application written for AMOS) understands only 512-byte disk blocks. Therefore, when a disk write request is made by a program, a single block transfer is made to the disk drive. If the program then writes the next sequential block, the system must wait the latency time of the drive (i.e., the time it takes the drive to complete one revolution) before the next block can be written. Latency, even on fast SCSI-2 drives, is around 7ms.

Write buffering can speed up the write process. When write buffering is enabled, all writes to the SCSI disk are first transferred into a buffer. If the write buffer becomes at least half full, or around three quarters of a second passes with no reads, or if a preset "guaranteed flush" time-out occurs, the SCZR60.DVR disk driver will begin scanning through the write buffer, finding blocks that need to be written out to the drive. The algorithm used to flush blocks out to the drive is able to find up to eight consecutive blocks and write them to the disk drive as a single write command, therefore dramatically improving system performance.

Another benefit of write buffering is it tends to eliminate duplicate disk writes, such as bitmap updates during operations such as copying files and tape restores, and prevents head thrashing when reading through random access data files and writing a sequential file out to the disk (as most report generation programs do).

Potential Pitfalls

Obviously, there can be problems with write buffering, especially if the system either crashes or is powered off while writes are pending in the write buffer. If that happens, all pending writes are lost. Though this sounds like a major problem, it can also happen if write buffering is not enabled. However, write buffering increases the number of writes at risk. The primary write buffering risks are an errant software operation or a hardware failure that causes a system crash.

To help reduce the possibility of data loss, certain safeguards have been put in place. Writes are not buffered indefinitely; they are performed whenever the device is not performing reads. Even if the drive is busy with read requests, the buffer is still periodically flushed, based on a user definable "absolute flush time." In addition, if you have a UPS installed and connected to the AM-319-20's UPS status port, and you experience a power failure and the UPS status port senses a low battery condition, AMOS will flush and disable the write buffer in preparation for a system shutdown. Also, the MONTST command automatically flushes the write buffer.

Therefore, you must weigh the potential for data loss (which is always there) versus the dramatic performance increase seen when using write buffering. If you are worried about the reliability of write buffering, it may be worth keeping in mind that the AM-520 disk controller has always used write buffering on a track-by-track basis (however, not quite as efficiently as the AM-176 write buffering scheme). The SMARTDRV program that comes with MS-DOS does write buffering (you may have noticed the "Waiting for system shutdown" message when rebooting a PC with CTRL-ALT-DELETE) and UNIX-based computers have always done it.

Setting Up Write Buffering

To enable write buffering, you must be using the full SCSI dispatcher (SCZR60.SYS). Enable write buffering by adding parameters to the SYSTEM statement used to load the SCSI disk driver into system memory. Append "/N" followed by the buffer size and flush period enables write buffering for that device. The syntax is:

```
SYSTEM DVR:dev/N buffer-size flush-period
```

For example:

```
SYSTEM DVR:DSK/N 200K 60
```

The ***buffer-size*** is the size of the write buffer (you specify the size in Kilobytes). We advise a buffer size of 100K to 200K.

The ***flush-period*** is the maximum number of seconds data may be left in the write buffer without being written to the disk. For example, if you specify 30, you will know that after 30 seconds any pending writes will be written to the disk. This is true even if the disk is constantly busy servicing reads.

One SYSTEM command is required for each different SCSI disk driver present in the system. For example, if you have two 1.2GB SCSI-2 drives named DSK0-36 and DSK37-73 and one 540MB SCSI-2 drive named SUB0-17, you need one SYSTEM command for the DSK device (although it's really two physical drives) and one SYSTEM command for the SUB device.

When specifying write buffering for a device, two files are placed into system memory: .DVR (loaded from disk) and .WRC (directly created in system memory), which are the driver and cache buffer. This is true for all SCSI disk devices except the DSK device. For the DSK device, the file DSK.DVR does not need to be created because it is already loaded into the system monitor. Therefore, for the DSK device, only the file DSK.WRC will be created in system memory.

In the three-drive example mentioned earlier, the added SYSTEM commands would look like this:

```
SYSTEM DVR:DSK/N 100K 60  ;Driver in AMOS will create DSK.WRC
SYSTEM DVR:SUB/N 100K 60  ;Load SUB.DVR and create SUB.WRC
```

This would set up 100K of write buffering for the DSK devices and 100K of write buffering for the SUB device. All three drives would have their write buffers flushed every minute (or sooner if the drives are not busy with read requests).

FINAL NOTES

Both read-ahead and write buffering schemes used on the AM-176 board dramatically improve system performance in our lab tests. Both schemes are fine-tuned for the 68060 processor and RISC SCSI controller and do not take cycles away from AMOS like other commercially available disk optimization software.

Although our lab tests attempt to simulate the "real world" of user applications, they probably use the resources of the AM-176 CPU and SCSI subsystem differently than your application does; therefore we highly recommend you experiment with cache and write buffer sizes, read-ahead blocks, and flush periods on an installed system to find the best possible combination for that system.

Appendix C - AM-4000 Pedestal Chassis Upgrade

In this upgrade the AM-176 and the AM-319-20 boards functionally replace the AM-190 board. This upgrade procedure involves the removal of the old CPU and the installation of two new boards and a new extended rear panel. The following instructions walk you through this process.

PREPARING FOR THE UPGRADE

Before embarking on this upgrade, please ensure you have completed all of the steps in Chapter 5, "Beginning a Roadrunner 060 Upgrade." Do not begin the hardware installation until you've performed all of the necessary preliminary processes.

While your computer's hardware is exposed and the AC power cord is unplugged, the components are vulnerable to damage caused by static discharge. Before you handle any computer hardware, make certain your work area is properly protected against static discharge.

ACCESSING YOUR HARDWARE

1. Power down your computer and remove all cables from the back panel, including the power cord.
2. Lay the computer on its side with the bezel facing away from you. We recommend that you place the chassis on a padded work surface.
3. Unscrew the feet off the pedestal chassis and set them aside; or let them hang over the edge of a table.
4. Remove the cover, as follows:
    - Looking at the computer from the back, remove the three screws on the right side of the cabinet that hold the top cover to the chassis.
    - Remove the top three screws on the left side of the cabinet. Two of these screws are attached to the computer's mounting feet.
    - Remove the small screw near the center top of the back panel, just to the right of the chassis slot marked E.
    - Lift the cover slightly and slide it off toward you. Remove it and set it aside.

Removing the Old I/O Panel and the AM-190 Board

1. Unplug the 60-pin I/O cable from the CPU board.
2. Remove the four hex standoffs that retain the CPU board's port 0 and port 1 connectors.
3. Remove all the screws from the rear panel.

4. You should be able to separate the rear panel from the chassis by sliding it back and laying it down flat. Remove any I/O paddle boards and the external SCSI cable attached to the rear panel.
5. Disconnect any remaining cables connected to the CPU.
6. Remove the AM-190 board by sliding it out the rear of the card cage.
7. If you have an AM-219 floppy controller board, remove it from the AM-190 board. Insure you save the two standoffs that attach the AM-219 to the AM-190.

Removing Obsolete Hardware

1. Unplug the power supply harness.
2. Remove the single hex nut attaching the power supply deck plate to the chassis (if applicable).
3. Remove power supply and deck plate (if applicable) from the chassis.
4. Remove all ESDI drives, cables and controllers.

INSTALLING THE AM-319-20 BOARD

Once you've removed the old CPU board:

1. Install the new SSD chip, included in your upgrade kit, at U73 on the AM-319-20. This 28-pin PLCC socket is clearly marked.
2. If you have an AM-219 floppy controller board, refer to PDI-00219-00 (Rev. A01 or later), for installation instructions. Follow the directions for attaching the AM-219 to an AM-319-20 in an Eagle 550.
3. Align the AM-319-20 board with the bottom nylon card guide and insert it gently into the bottom slot of the chassis.
4. Reroute and plug the 26-pin panel display cable into the P12 connector on the AM-319-20 board. Make sure the red stripe on the cable aligns with pin-1 on the connector.
5. The kit includes two X-bus cables, which will be labeled as A/D and C/S.

Your kit provides labels for these two cables. Label both ends of the connectors before attaching them to the AM-319-20 board. Once the two cables are plugged into the AM-319-20, and you have slid the AM-176 board on its mounting over it, you will not be able to differentiate between them since you must fold and tuck them in.

Insure the red stripe on each cable lines up with pin-1 on each connector. Pin-1 is oriented toward the rear of the chassis. Both cables, when properly oriented, will exit the shrouded connector toward the center of the AM-319-20 board. Install as follows:

- A/D bus cable connects at P7 on the AM-319-20 board.
- C/S bus cable connects at P8 on the AM-319-20 board.

THE NEW I/O PANEL ASSEMBLY

The new rear panel, included in your kit, is partially assembled. To complete the assembly:

1. Install all I/O boards in the slots above the 060 mounting plate. Be sure that the last I/O board is terminated and the I/O cable stops on the last connector. To verify I/O board compatibility, please refer to Chapter 2.
2. Lay new I/O panel assembly outside the rear panel with the cables side up, as if it were ready to tilt up 90° and attach to chassis.
3. Connect the four printer cables to P5 (LPT0), P2 (LPT1), P1 (LPT2), and P4 (LPT3) on the AM-319-20 board.
4. If there is a hole in the side of the chassis for the old power supply switch, slide the Roadrunner 060 logo assembly (DWB-20468-00) into the slot in the side panel (optional).

INSTALLING THE AM-176 BOARD

1. Attach the AM-176 board to the mounting plate (DWF-20762-01) with four Phillips pan-head screws (.312" long).
2. Install the external cache SIMM at J1. For specific SIMM installation instructions, please refer to Chapter 3.
3. Install memory SIMMs in **pairs of equal capacity**. Please refer to Table 3-1 for explicit configurations to accomplish the desired total memory.
4. Once the memory is installed, set the memory size jumpers on the AM-176 board. Refer to Table 3-2.
5. Carefully slide the mounting plate, with the AM-176 board on it, into the fourth nylon card guide from the top to allow room for the I/O connectors. Make sure you orient the AM-176 board so the SCSI connector is toward the rear of the chassis. You will be able to slide the AM-176 board back and forth on its nylon card guide until you have completed the installation.
6. Tilt up the rear panel and attach it to the chassis, making sure no cables are trapped or pinched between the rear panel and the chassis.
7. Plug the two DC power connectors from the power supply into the AM-319-20 board. The power supply is on the new rear panel assembly, at one end. Two extension harnesses are provided so the DC cables reach the connectors on the board. The extension harnesses are clearly marked as P9 and P8, same as the power supply connectors. Follow these instructions, supporting the bottom of the AM-319-20 with one hand while pushing the connectors all the way in with the other hand:
   - The power supply cable connector marked P9 plugs in at the J5 connector on the AM-319-20 board.
   - The power supply cable connector marked P8 plugs in at the J6 connector on the AM-319-20 board.
   - The J7 connector on the AM-319-20 board is not used.

If the DC power connectors on your computer are not labeled, contact your Alpha Micro dealer or Alpha Micro's Technical Assistance Center. **Do not plug in the connectors until you are certain where they go.**

Use the following table as a guide for your DC power connectors. Ensure that voltages marked on the board coincide with the correct color coded wire harness from the power supply.

Wire Color	Voltage:
Yellow	+12
Red	+5
White	-5
Blue	-12
Black	Ground
Orange	Power Good

Power Supply DC Cable Voltage Color Coding

8. Plug in the DC power connector from the power supply at P7 on the AM-176 board.
9. Plug in the serial 9-pin D-Sub connector from the rear panel to P9 on the AM-176 board.
10. At P1 on the AM-176, plug in the AUI (Ethernet) cable from the 15-pin D-Sub connector on the rear panel. You must twist the cable for pin-1 orientation to be correct.

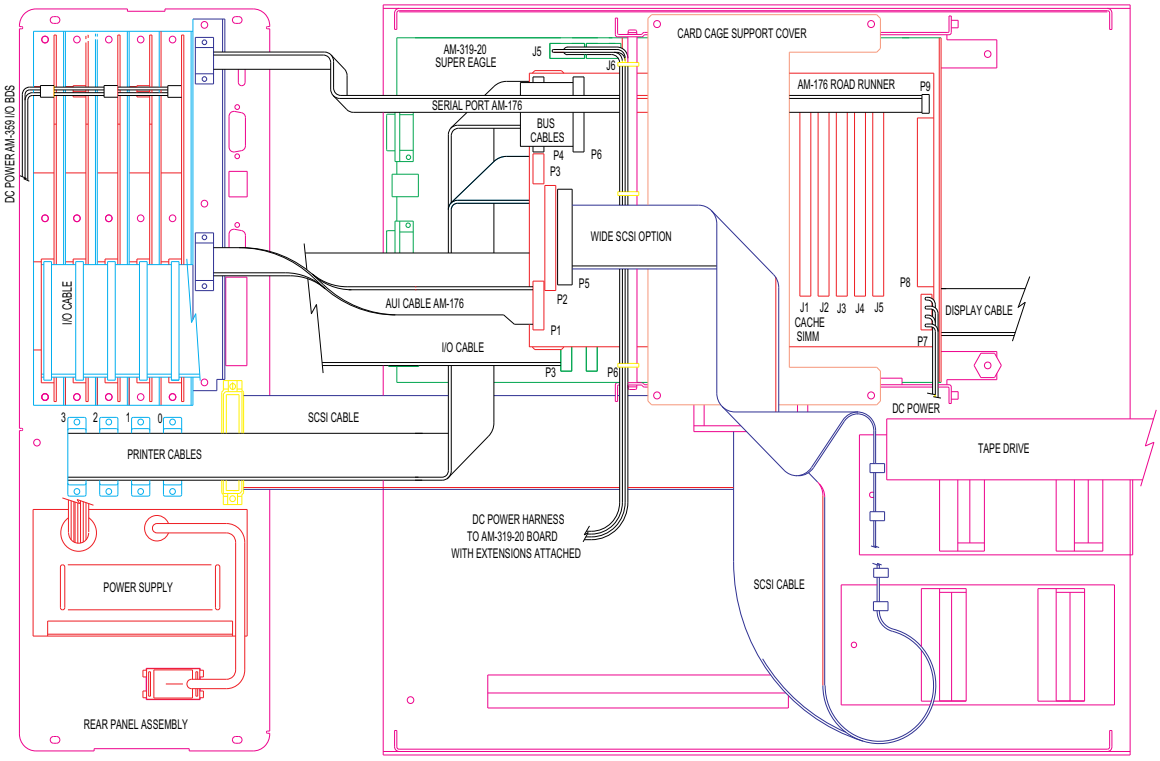

Figure C-1: AM-319-20 and AM-176 Cabling (Pedestal Chassis)

X-Bus Cable Routing

The cables have keyed connectors. It is vital that you always align the red stripe on the cable with pin-1 on the connector.

Connect the two Roadrunner X-bus cables (originating on the AM-319-20 board) to the AM-176 board, as follows:

- C/S bus cable at P6 on the AM-176 board (from P8 on the AM-319-20 board).
- A/D bus cable at P4 on the AM-176 board (from P7 on the AM-319-20 board).

Installing the SCSI Cable

The AM-176 includes two SCSI connectors: a 50-pin connector used for SCSI and SCSI-2, and a 68-pin connector used for Wide SCSI. Please refer to Chapter 2 for more information on SCSI devices and cables.

1. Once you have determined which connector you need to use:
   - Plug the 68-pin Wide SCSI cable (DWB-10319-03), included in your Wide SCSI kit, at P5.

     or

   - Plug the new 50-pin SCSI cable (DWB-10302-07), provided with your upgrade kit, at P2.

These two SCSI cables are mutually exclusive. Always use one, never both.

2. Mount the card cage cover plate (DWF-20304-00) on top of the card cage and fasten with four 6-32 Phillips pan-head screws (.312" long), one per corner.
3. Route the SCSI bus cable over the top of the bracket so it cannot interfere with the fan on the AM-176 board.
4. Route the SCSI cable to the SCSI peripherals and out to the external SCSI connector on the rear panel. Plug the cable into each disk or tape drive.

If you are connecting Wide SCSI devices to a narrow cable, or vice-versa, be sure to use the appropriate adapter between the device and the cable connector.

5. Make sure the SCSI cable is terminated properly. This normally means plugging an external active terminator into the external SCSI port on the internal top panel or on the rear of the display panel. See Appendix A for more information on SCSI termination.
6. Attach the DC power cables (from the power supply) to each SCSI disk drive and peripheral.

Please refer to Chapter 2 for compatibility and instructions on the installation of SCSI devices and cabling.

INSTALLING THE NEW I/O REAR PANEL

1. Install the retainer bracket (DWF-20782-00) to keep the 060 Roadrunner mounting plate in position.
2. Tilt the new rear I/O panel assembly up and fasten with four screws on the four corners of the back panel.

3. Attach the AM-319-20 connectors to the rear panel with hex standoffs and the AUI slide latch assembly.

FINISHING UP

The hardware portion of the upgrade is complete. Return to Chapter 6 for the testing and booting procedures for the Roadrunner 060. Perform these procedures before attaching the computer's cover, in case you need to make some adjustments.

Once your system completes the testing procedures successfully:

1. Attach the cover
2. Attach the pedestal feet.
3. Install the Roadrunner 060 logo plate on the display panel near the Alpha Microsystems logo (optional).

Appendix D - AM-4000 Rack Mount Chassis Upgrade

In this upgrade the AM-176 and the AM-319-20 boards functionally replace the AM-190 board. This upgrade procedure involves the removal of the old CPU and the installation of two new boards. The following instructions walk you through this process.

PREPARING FOR THE UPGRADE

Before embarking on this upgrade, please ensure you have completed all of the steps in Chapter 5 "Beginning a Roadrunner 060 Upgrade." Do not begin the hardware installation until you've performed all of the necessary preliminary processes.

While your computer's hardware is exposed and the AC power cord is unplugged, the components are vulnerable to damage caused by static discharge. Before you handle any computer hardware, make certain your work area is properly protected against static discharge.

ACCESSING YOUR HARDWARE

1. Power down your computer and remove all cables from back panel, including the power cord.
2. Unlatch slides and carefully slide rack out of system.
3. Remove the seven screws that hold top cover to chassis.
4. Lift top cover off and place it out of the way.
5. To remove the rear I/O panel:
    - Remove the four screws that hold the I/O panel to the chassis.
    - Lay the I/O panel next to the rear of the chassis.
    - Unplug the 60-pin I/O cable from the AM-190 board.
    - Set the I/O panel aside without removing the paddle boards.

REMOVING THE OLD CPU

1. Disconnect all the cables attached to the old CPU board. Mark these clearly for identification purposes, as follows:
    - The 26-pin display cable to the front panel. Carefully, re-route cable out of the card cage and back toward the front panel.
    - The 50-pin SCSI interface cable from your old CPU board (this cable will be replaced with the cable included in the upgrade kit).

2. If you have an AM-219 floppy controller board, remove it from the AM-190 board. Insure you save the two standoffs that attach the AM-219 to the AM-190.
3. Remove all ESDI drives, cables and controllers.
4. Remove any other VME boards in the card cage.
5. Remove the two screws that attach the CPU rear panel to the chassis
6. Slide the AM-190 board out of the card cage.

EXTENDING THE CARD CAGE

To make room for the Roadrunner 060 board while maintaining appropriate spacing for the I/O paddle boards, you need to extend the mother board 1.5" from the card cage within your rack. To do so:

1. Remove the six screws that attach the mother board to the card cage (three per side). Pull the mother board back to allow you space to work, but do not take it out of the card cage or disconnect the power supply harness.
2. Remove the four screws (and washers) or nuts that attach the cable shield and the card cage to the bottom of the chassis. You will not be using the cable shield anymore, so you can discard it.
3. Re-position the card cage, making sure to tighten the screws or nuts.
4. The upgrade kit includes twelve standoffs to extend the mother board from the card cage, as follows:
    - Make four spacers, each consisting of three standoffs (1.5" long).
    - Attach spacers to the card cage, one at each corner.
5. Mount the mother board to the spacers and fasten tightly at the four locations.

INSTALLING THE AM-319-20 BOARD

Insert the AM-319-20 board into the card cage using the following procedure:

1. Install the new SSD chip (PDB-00014-14), included in your upgrade kit, at U73. This 28-pin PLCC socket is clearly marked on the AM-319-20 board.
2. Attach the new rear panel adapter plate to the AM-319-20 by inserting the two hex 4/40 standoffs at the DB-9 connector and the slide latch assembly for the AUI DB-15 connector.
3. If you have an AM-219 floppy controller board, refer to PDI-00219-00 (Rev. A01 or later), for installation instructions. Follow the directions for attaching the AM-219 to an AM-319-20 in an Eagle 550.
4. Re-route and fold the display cable between the mother board and the card cage side bracket.
5. Align the AM-319-20 board with the bottom nylon card guide and insert it gently into the bottom slot of the chassis. Fasten both Phillips-head screws on the rear panel adapter to chassis.
6. Plug the 26-pin panel display cable into the P12 connector on the AM-319-20 board. Make sure the red stripe on the cable aligns with pin-1 on the connector.
7. The kit includes two X-bus cables, which will be labeled as A/D and C/S.

Your kit provides labels for these two cables. Label both ends of the connectors before attaching them to the AM-319-20 board. Once the two cables are plugged into the AM-319-20, and you have slid the AM-176 board on its mounting over it, you will not be able to differentiate between them since you must fold and tuck them in.

Insure the red stripe on each cable lines up with pin-1 on each connector. Pin-1 is oriented toward the rear of the chassis. Both cables, when properly oriented, will exit the shrouded connector toward the center of the AM-319-20 board. Install as follows:

- A/D bus cable connects at P7 on the AM-319-20 board.
- C/S bus cable connects at P8 on the AM-319-20 board.

NEW DC POWER HARNESS INSTALLATION

Plug the DC power harnesses and discrete wires into the mother board as indicated below. ***CAUTION: Reversing the order of these cables will result in damage to your board.***

If the DC power connectors on your computer are not labeled, contact your Alpha Micro dealer or Alpha Micro's Technical Assistance Center. **Do not plug in the connectors until you are certain where they go.**

Support the bottom of the AM-319-20 with one hand, while pushing the connectors all the way in with the other. Attach the DC power wires and the new harness as follows:

- Attach the blue discrete wire (-12V) at J8, pin-1 on the mother board.
- Attach the red discrete wire (+5V) at J9, pin-2 on mother board.
- Attach the gray discrete wire from new harness (power good signal) to the discrete wire attached to the mother board at J7, pin-1. Unplug wire from mother board and plug the two wires together.
- Attach P1 from harness at J6 on the AM-319-20 board.
- Attach P2 from harness at J5 on the AM-319-20 board.
- Attach new harness, P3, to the J3 connector on the mother board (if available). If J3 is not available, move the connectors or use a "Y" cable.

REAR PANEL I/O ASSEMBLY

To complete the rear panel assembly, do the following:

1. Mount the four printer ports (provided with upgrade kit) on the first slot above the AM-319-20 board with three screws.
2. Mount the 060 mounting plate with the AUI (Ethernet) 15-pin D-Sub connector and the serial port mounts in the second slot above the AM-319-20.
3. Move each I/O board up as required to allow for printer ports and the 060 mounting plate. Be sure that the last I/O board is terminated and the I/O cable stops on the last connection.
4. Lay rear panel assembly flat next to the chassis, as if it were ready to tilt up 90° and attach to chassis, while you complete the installation.

INSTALLING THE AM-176 BOARD

1. Attach the AM-176 board to the mounting plate (DWF-20762-01) with four Phillips pan-head screws (.312" long).
2. Install the external cache SIMM at J1. For specific SIMM installation instructions, please refer to Chapter 3 in this manual.
3. Install the memory SIMMs in **pairs of equal capacity**. Please refer to Table 3-1 for explicit configurations to accomplish the desired total memory.
4. Once the memory is installed, set the memory size jumpers on the AM-176 board. Refer to Table 3-2.
5. Carefully slide the mounting plate, with the AM-176 board on it, into the eighth nylon card guide from the top to allow room for the I/O connectors. You will be able to slide the AM-176 board back and forth on its nylon card guide until you have completed the installation.
6. Plug in the DC power connector at P7 on the AM-176 board and attach it to an open power connector on the mother board. If you do not have any available power connectors on the mother board, a "Y" connector is furnished with the upgrade kit.
7. At P1 on the AM-176 board, plug in the AUI (Ethernet) cable from the 15-pin D-Sub connector on the rear panel. You must twist the cable for pin-1 orientation to be correct.
8. Plug in the serial I/O cable from the rear panel to P9 on the AM-176 board.
9. Connect the two Roadrunner X-bus cables (originating on the AM-319-20 board) to the AM-176 board, as follows:
    - C/S bus cable into P6 on the AM-176 board (from P8 on the AM-319-20 board).
    - A/D bus cable into P4 on the AM-176 board (from P7 on the AM-319-20 board).
10. Fix the AM-176 board with the retainer bracket (DWF-20782-00) provided in the kit. Make sure the tab on the bracket goes into the slot on the card cage. See Figure D-2.
11. Mount the card cage cover plate (DWF-20304-00) on top of the card cage and attach with four screws, one per corner. See Figure D-2.
12. Attach the I/O cable at P3 on the AM-319-20 board.
13. Reinstall the I/O panel with four screws.

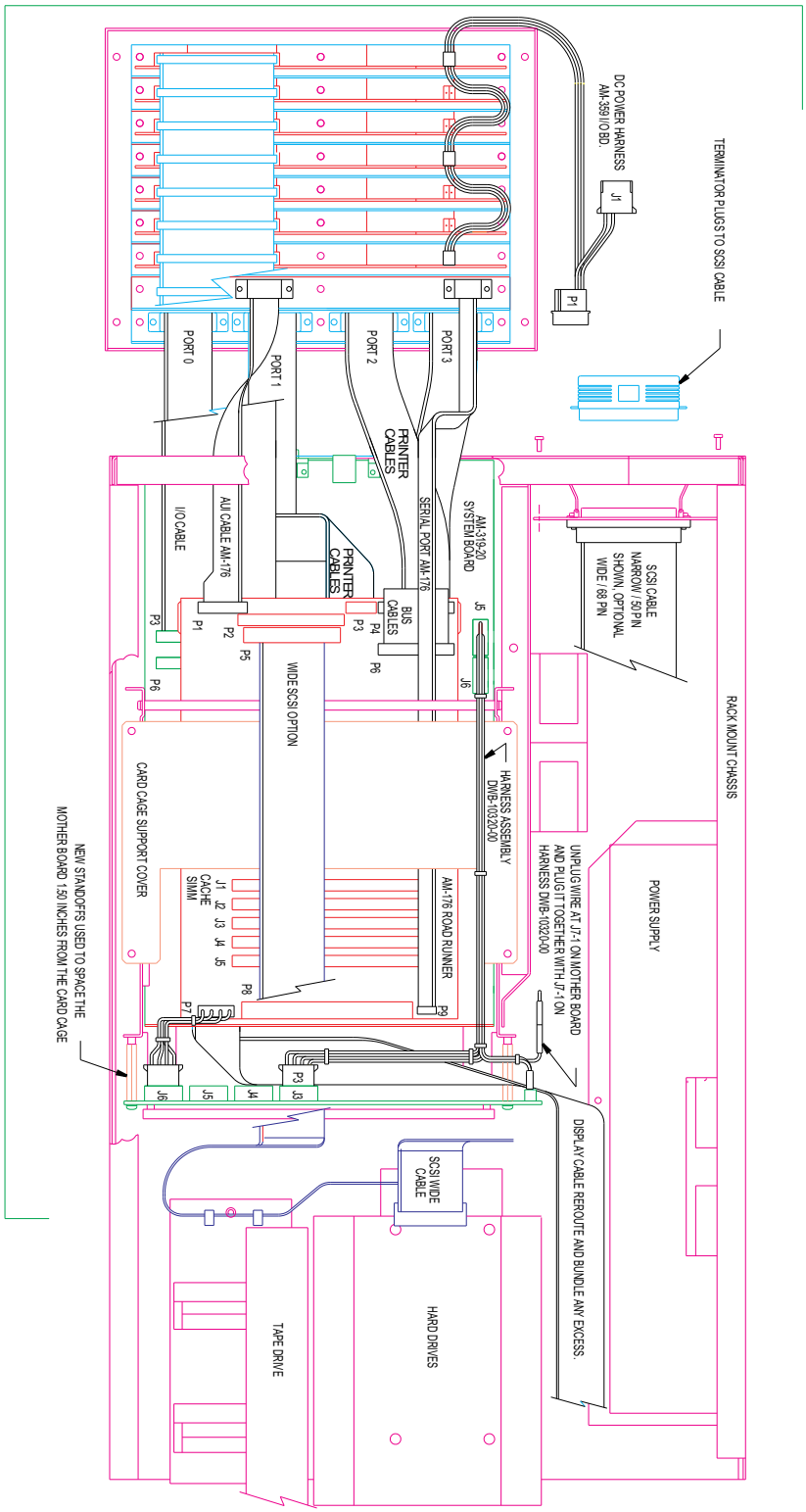

Figure D-1: AM-319-20 and AM-176 Cabling (Rack Mount Chassis)

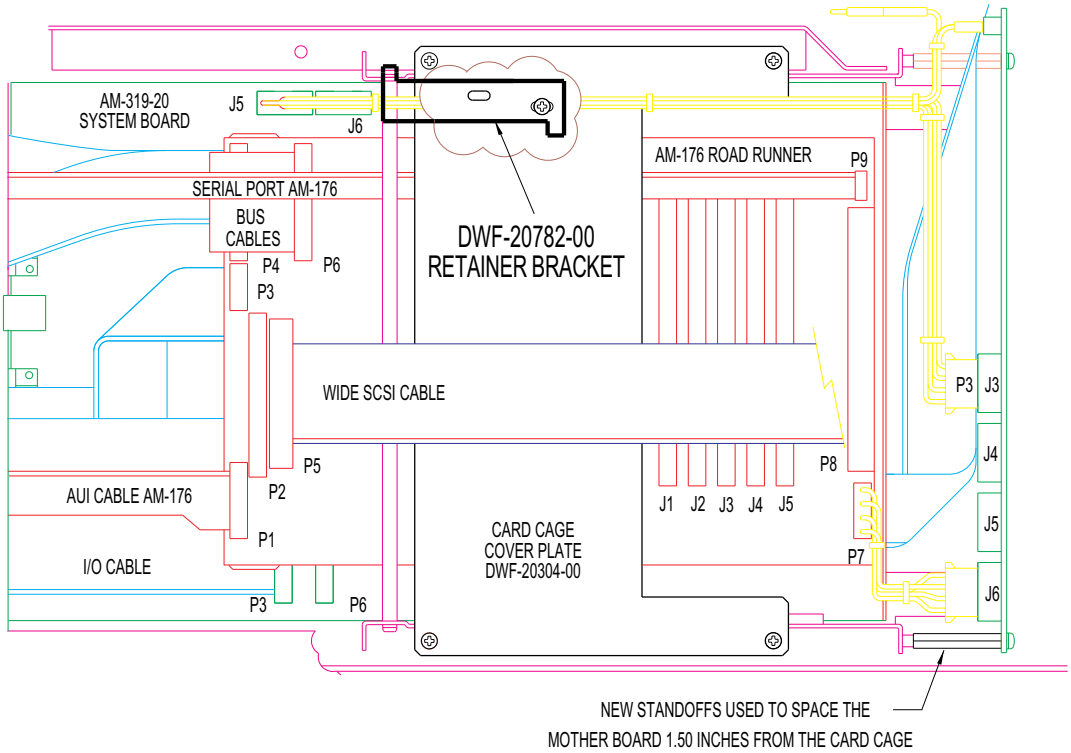

Figure D-2: Retainer Brackets (Rack Mount Chassis)

Installing the SCSI Cable

The Roadrunner 060 upgrade kit includes two SCSI connectors: a 50-pin connector used for SCSI and SCSI-2, and a 68-pin connector used for Wide SCSI. Please refer to Chapter 2 for more information on SCSI devices and cables.

1. Once you have determined which connector you need to use:
   - Plug the 68-pin Wide SCSI cable (DWB-10319-04), included in your Wide SCSI kit, at P5.

     or

   - Plug the new 50-pin SCSI cable (DWB-10302-08), provided with your upgrade kit, at P2.

   These two SCSI cables are mutually exclusive. Always use one, never both.

2. Route the SCSI cable from P2 or P5 on the AM-176 board to the SCSI peripherals and out to the external SCSI connector on the rear panel. Plug the cable into each SCSI disk or tape drive.

   If you are connecting Wide SCSI devices to a narrow cable, or vice-versa, be sure to use the appropriate adapter between the device and the cable connector.

3. Make sure the SCSI cable is terminated properly. This normally means plugging an external active terminator into the external SCSI port on the back panel. See Appendix A for more information on SCSI termination.

FINISHING UP

The hardware portion of the upgrade is complete. Return to Chapter 6 for the testing and booting procedures for the Roadrunner 060. Once your system completes the testing procedures successfully:

1. Attach the top cover to the chassis with seven screws.
2. Slide the rack back into the cabinet. Make certain the slides latch.
3. Install the 060 Roadrunner logo plate on the front panel, near the Alpha Microsystems logo.

Appendix E - AM-4000 in AM-990 or AM-990 Jumbo Chassis Upgrade

In this upgrade the AM-176 and the AM-319-20 boards functionally replace the AM-190 board. This upgrade procedure involves the removal of the old CPU and the installation of two new boards. The following instructions walk you through this process.

PREPARING FOR THE UPGRADE

Before embarking on this upgrade, please ensure you have completed all of the steps in Chapter 5 "Beginning a Roadrunner Upgrade." Do not begin the hardware installation until you've performed all of the necessary preliminary processes.

While your computer's hardware is exposed and the AC power cord is unplugged, the components are vulnerable to damage caused by static discharge. Before you handle any computer hardware, make certain your work area is properly protected against static discharge.

ACCESSING YOUR HARDWARE

1. Power down your computer. Remove all cables attached to the rear panel, including the power cord.
2. Insert the key originally shipped with your computer in the door lock and open it.
3. To remove the top panel:
    - Swing the front door open to expose the screws that hold the top cover in place. See Figure E-1.
    - Remove the two Phillips-head screws that connect the top cover to the chassis.
    - Remove the display key from the front panel before you attempt to remove the top cover.
    - Slide the top cover forward and lift it off. Set it aside.

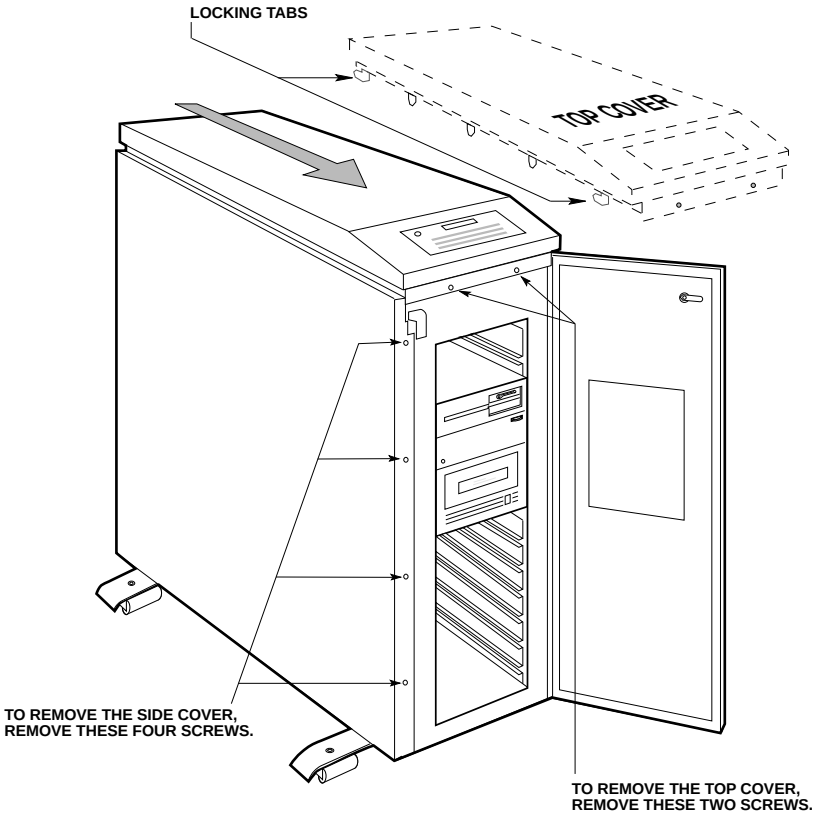

Figure E-1: AM-990 Enclosure Removal

4. To remove the side and rear panels:
   - Swing the front door open to gain access to the screws that hold the side panel to the chassis.
   - Remove the four screws along the left edge (behind the front door). Lift the side panel, slide it to the front, and place it out of the way.

   For ease of assembly, lay the AM-990 chassis on its side, bezel away from you. We recommend that you place the chassis on a padded work surface. Remove the feet from the bottom of the chassis, or let them hang over the edge of a table.

   - Remove the card cage lid (DWF-20670-00) by removing the five screws and lifting it out of the way.
   - Remove the four screws that hold the rear I/O panel to the card cage and unplug I/O cable.
   - Move the rear I/O panel out of the way. You will be installing a new I/O rear panel, included in your upgrade kit.

REMOVE YOUR OLD CPU

1. Remove the two screws at the bottom of the back panel that attach your old CPU to the card cage.

2. Disconnect all cables attached to the old CPU board. Mark these clearly for identification purposes, as follows:
   - The 26-pin display to the front panel. Reroute and bundle any excess.
   - The 50-pin SCSI interface cable from your old CPU board (this cable will be replaced with the cable included in the upgrade kit).
   - The DC power cables from the power supply, if used.
   - Bus B serial I/O cables to the internal I/O boards at the top. This step is optional.
3. If you have an AM-219 floppy controller board, remove it from the AM-190 board. Insure you save the two standoffs that attach the AM-219 to the AM-190 CPU board.
4. Slide the old CPU out of the card cage.

ASSEMBLING THE NEW REAR I/O PANEL

A new, extended rear panel assembly is included in your upgrade kit.

1. Attach the four parallel printer ports to the first slot in the rear panel (when installed in the chassis, this should be the first slot above the AM-319-20 board).
2. Attach the 060 Roadrunner I/O rear panel with serial I/O 9-pin D-Sub connector and AUI (Ethernet) connector to the second slot in the I/O panel (immediately above the printer ports).
3. Attach I/O paddle cards to the third through the sixth slots on the rear panel. Refer to Chapter 2 for I/O board compatibility. Make certain the last I/O board is terminated and the I/O cable stops on the last connection.

INSTALLING THE AM-319-20 BOARD

1. Install the new SSD chip, included in your upgrade kit, at U73 on the AM-319-20 board. This 28-pin PLCC socket is clearly marked.
2. If you have an AM-219 floppy controller board, refer to PDI-00219-00 (Rev. A01 or later), for installation instructions. Follow the directions for attaching the AM-219 to an AM-319-20 in an Eagle 550.
3. Attach the new rear panel adapter plate to the AM-319-20 by inserting the two hex 4/40 standoffs at the DB-9 connector and attach the slide latch assembly to the AUI DB-15 connector.
4. Align the AM-319-20 board with the bottom nylon card guide and insert it gently into the bottom slot of the chassis. Fasten both Phillips-head screws on the rear panel adapter to chassis.
5. Plug the 26-pin panel display cable into the P12 connector on the AM-319-20 board. Make sure the red stripe on the cable aligns with pin-1 on the connector.
6. Lay the new rear I/O panel assembly outside its location in the chassis. You want the cables to protrude so you can attach them when necessary.

7. Attach the four parallel printer connectors at the clearly marked locations P5 (LPT0), P2 (LPT1), P4 (LPT2), and P1 (LPT3) on the AM-319-20 board.

If your system has a VME mother board, you must replace the DC power harness, as follows:

- Disconnect the DC power adapter harness from the mother board.
- Unplug the mother board adapter harness from the power supply.
- Replace with the new DC power adapter harness, DWB-10305-00, which is furnished with the upgrade kit.

8. Plug the three DC power connectors from the power supply harnesses into the AM-319-20 board. ***CAUTION: Reversing the order of these cables will damage your board***.

   Support the bottom of the AM-319-20 board with one hand, while pushing these connectors all the way in with the other hand.

   - The cable connector marked PS2 plugs in at the J5 connector on the AM-319-20 board.
   - The cable connector marked PS1 plugs in at the J6 connector on the AM-319-20 board.
   - The cable connector marked PS3 plugs in at the J7 connector on the AM-319-20 board.

If the DC power connectors on your computer are not labeled, contact your Alpha Micro dealer or Alpha Micro's Technical Assistance Center. **Do not plug in the connectors until you are certain where they go.**

Use the following table as a guide for your DC power connectors. Ensure that voltages marked on the board coincide with the correct color coded wire harnesses from the power supply.

Wire Color	Voltage:
Yellow	+12
Red	+5
White	-5
Blue	-12
Black	Ground
Orange	PG

Power Supply DC Cable Voltage/Color Coding

9. The upgrade kit provides two X-bus cables and two sets of labels (one for A/D, and one for C/S). Label both connector ends before attaching to the AM-319-20. Once you slide the AM-176 board mounting over it, you will be unable to differentiate which is which. Make sure the red stripe on the cable aligns with pin-1 on the mating connector. Install:

   - A/D bus cable at P7 on the AM-319-20 board
   - C/S bus cable at P8 on the AM-319-20 board

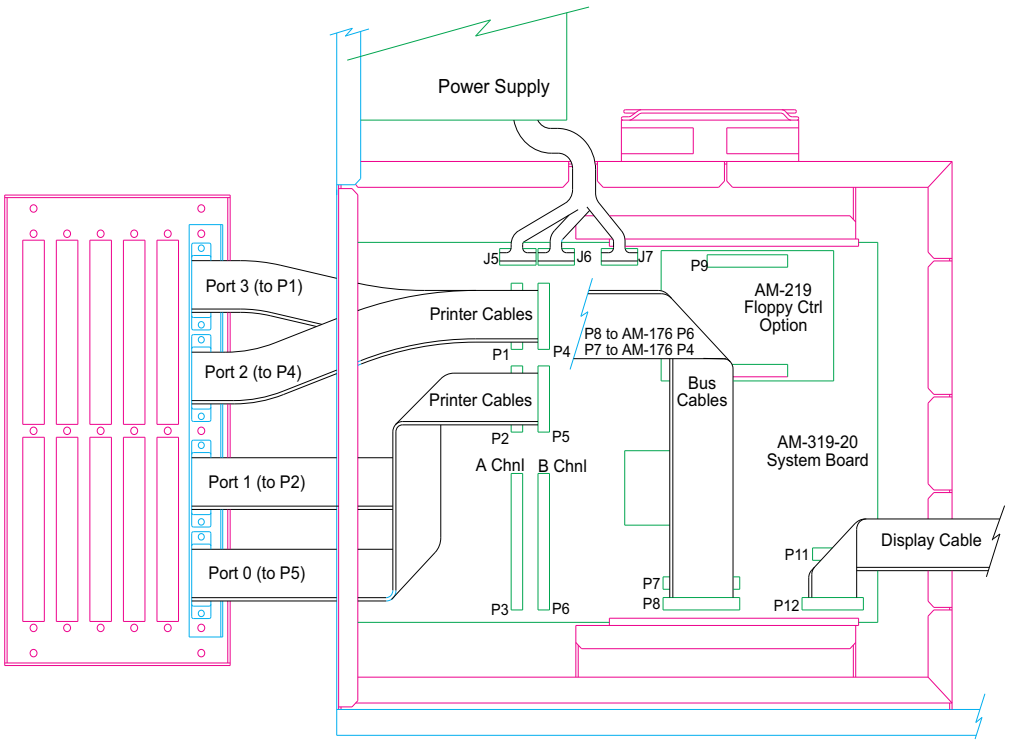

Figure E-2: AM-319-20 Board and Cable Routing (AM-990 Chassis)

INSTALLING THE AM-176 BOARD

1. Assemble the AM-176 board on the mounting plate (DWF-20762-01) with four Phillips pan-head screws (.312" long).
2. Fasten the nylon screw included in the kit into the second threaded standoff from the top (centered left to right), in the front of the card cage so when you slide the AM-176 board into position, there is no possibility of damaging the processor connector at P8.
3. Install the external cache SIMM at J1. For specific SIMM installation instructions, please refer to Chapter 3.
4. Install memory SIMMs in **pairs of equal capacity**. Please refer to Table 3-1 for explicit configurations to accomplish the desired total memory.
5. Once the memory is installed, set the memory size jumpers on the AM-176 board. Refer to Table 3-2.
6. Carefully slide the mounting plate, with the AM-176 board mounted on it, into the fourth nylon card guide from the top to allow room for the AM-319-20 board and I/O connectors. Make sure you orient the AM-176 board so the SCSI connector is toward the rear of the chassis.
7. Plug in the DC power connector from the power supply at P7 on the AM-176 board.

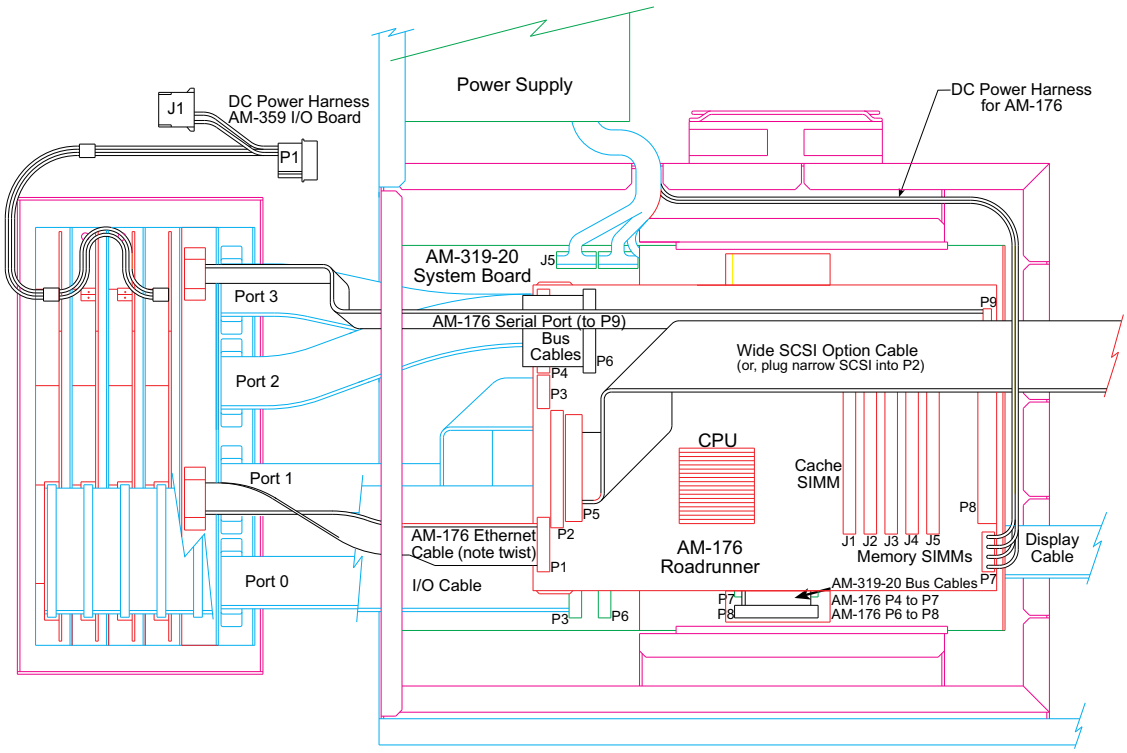

Figure E-3: AM-319-20 and AM-176 Cable Routing (AM-990 Chassis)

X-Bus Cable Routing

These cables have keyed connectors. It is vital that you always align the red stripe on the cable with pin-1 on the connector.

Connect the two Roadrunner X-bus cables (originating at the AM-319-20 board) to the AM-176 board, as follows:

- C/S bus cable into P6 on the AM-176 board (from P8 on the AM-319-20 board)
- A/D bus cable into P4 on the AM-176 board (from P7 on the AM-319-20 board)

Installing the SCSI Cable

The AM-176 board includes two SCSI connectors: a 50-pin connector used for SCSI and SCSI-2, and a 68-pin connector used for Wide SCSI. Please refer to Chapter 2 for more information on SCSI devices and cables.

1. Once you have determined which connector you need to use:
   - Plug the 68-pin Wide SCSI cable, included in your Wide SCSI kit, at P5. For the AM-990 chassis, use DWB-10319-01; for the AM-990 Jumbo chassis, use DWB-10319-02.

     or

   - Plug the new 50-pin SCSI cable included in your upgrade kit, at P2. For the AM-990 chassis, use DWB-10302-04; for the AM-990 Jumbo chassis, use DWB-10302-09.

These two SCSI cables are mutually exclusive. Always use one, never both.

2. Mount the card cage cover plate (DWF-20304-00) on top of the card cage and attach with four screws, one per corner.
3. Route the SCSI bus cable over the top of the cover plate so it cannot interfere with the fan on the AM-176 board.
4. Route the SCSI cable to the SCSI peripherals and out to the external SCSI connector on the internal top panel or on the rear of the display panel. Plug in the cable to each SCSI disk or tape drive.

If you are connecting Wide SCSI devices to a narrow cable, or vice-versa, be sure to use the appropriate adapter between the device and the cable connector.

5. Make sure the SCSI cable is terminated properly. This normally means plugging an active external terminator into the external SCSI port on the internal top panel or on the rear of the display panel. See Appendix A for more information on SCSI termination.

Please refer to Chapter 2 for compatibility and instructions on the installation of SCSI devices and cabling.

INSTALLING NEW REAR I/O PANEL

To ensure all I/O boards have adequate space, we have enlarged the card cage by adding a new, deeper rear panel. Once you've attached the I/O paddle cards to the new I/O rear panel, install it as follows:

1. Using the twelve ½" x 6/32 standoffs in your kit, make four sets of spacers (1.5" long each) by threading three standoffs together for each spacer.
2. Fasten the spacers into the four holes on the rear of the card cage.
3. Lay the I/O panel assembly flat next to the chassis, as if it were ready to tilt up 90° and attach to chassis (with paddle cards up).
4. Connect the I/O paddle board cable to the A Channel at P3 on the AM-319-20 board, and the optional B Channel at P6.
5. Plug the serial 9-pin D-Sub connector from the rear panel to P9 on the AM-176.
6. Plug the AUI (Ethernet) cable from the 15-pin D-Sub connector in rear panel to P1on the AM-176 board. You must twist the cable for correct pin-1 orientation.

7. Tilt the I/O panel up and fasten to the four spacers you attached to the back of the card cage.
8. Fix the AM-176 board with the retainer bracket (DWF-20782-00) provided in the kit. Make sure the tab on the bracket goes into the slot on the card cage. See Figure E-4.

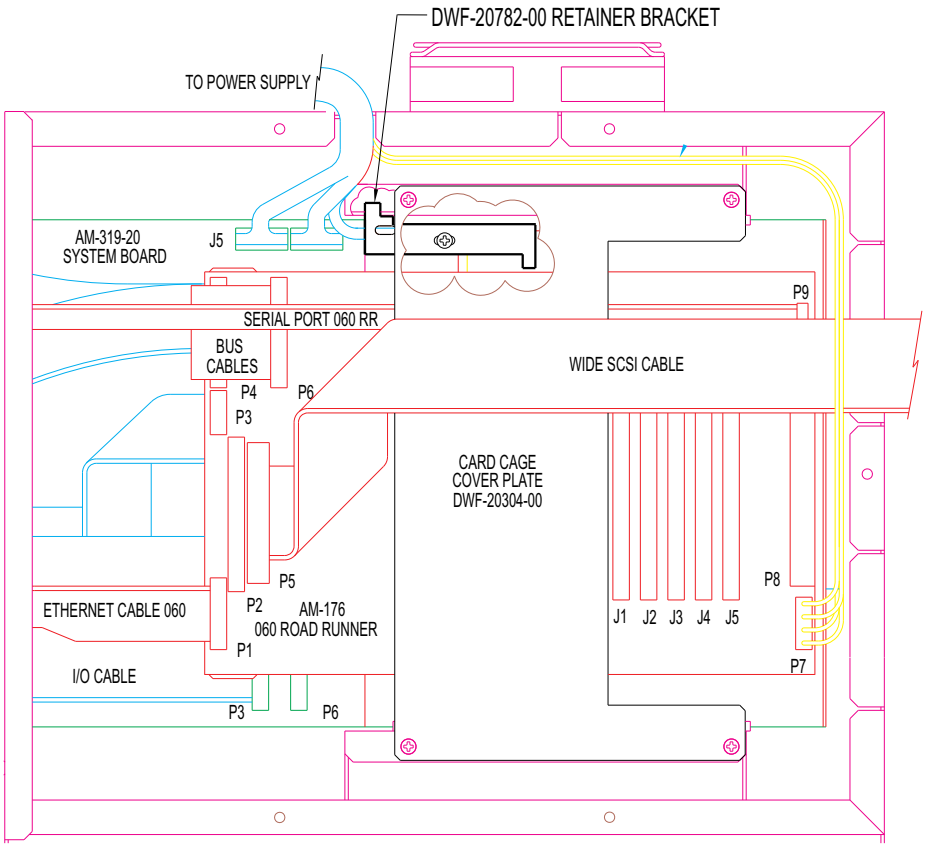

Figure E-4: AM-176 Retainer Bracket Placement

FINISHING UP

The hardware portion of the upgrade is complete. Return to Chapter 6 for the testing and booting procedures for the Roadrunner 060. Perform these procedures before replacing the computer's enclosure, in case you need to make some adjustments.

Once your system completes the testing procedures successfully, replace the enclosure, as follows:

1. Replace the card cage lid and attach with five screws
2. Replace the side panel and tighten the four screws along the left edge
3. Replace the top cover. Tighten the two screws along the top edge.
4. Close and lock front door.
5. Install the 060 Roadrunner logo plate on the front door near the Alpha Microsystems logo.

Appendix F - Super Eagle Deskside Chassis Upgrade

The following instructions explain the process of installing an AM-176 into a Super Eagle computer in a deskside chassis. The upgrade kit includes all the necessary hardware for installing the AM-176 board.

PREPARING YOUR SYSTEM FOR THE UPGRADE

Before embarking on this upgrade, please ensure you have completed all of the steps in Chapter 5 "Beginning a Roadrunner 060 Upgrade." Do not begin the hardware installation until you've performed all of the necessary preliminary processes.

While your computer's hardware is exposed and the AC power cord is unplugged, the components are vulnerable to damage caused by static discharge. Before you handle any computer hardware, make certain your work area is properly protected against static discharge.

REMOVING CHASSIS COVER

1. Power down your computer and unplug the power cord.
2. Unplug and label all external cables.
3. At the rear of the computer, remove the four screws that attach the top cover to the chassis.
4. Slide the top cover back and lift rear edge up (as indicated by the arrows on Figure F-1). Remove the cover and place it out of the way.

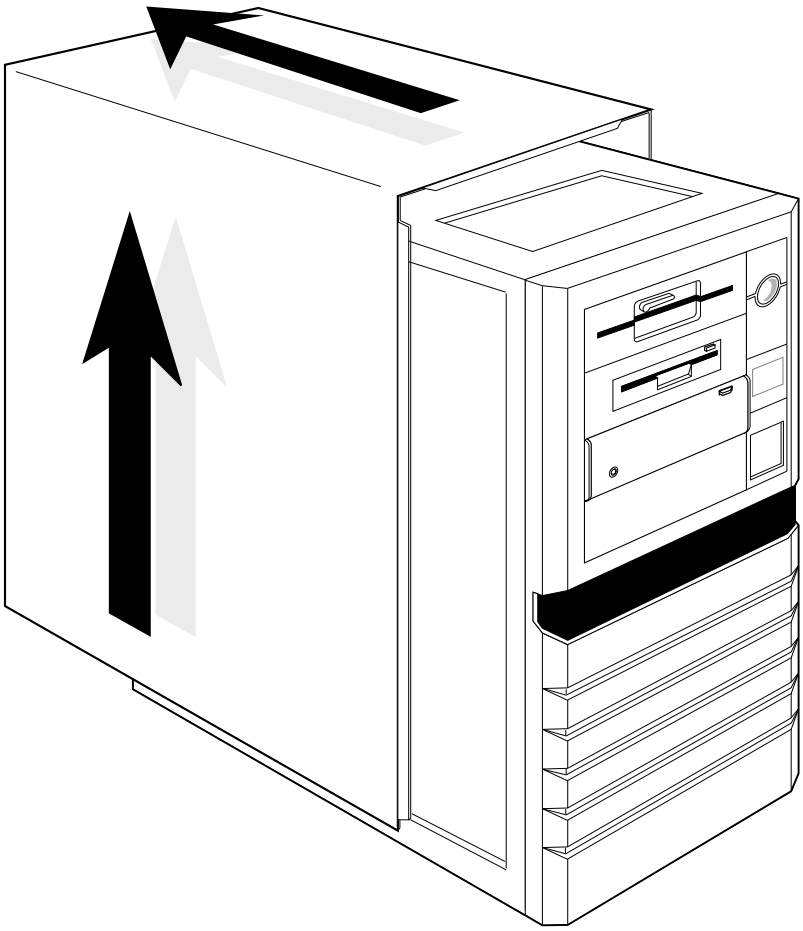

Figure F-1: Deskside Chassis Cover Removal

ACCESSING THE OLD ROADRUNNER BOARD

1. Remove the two screws (at each end of the panel near the center of the chassis) attaching the AM-319-20 mounting plate to the chassis. Also, remove the top hex standoff on the UPS connector.
2. Carefully lift the mounting plate up and forward, toward the front of the chassis, then out. Rest on the bottom bracket of mounting panel, close to the chassis. Do not remove cables from the AM-319-20, unless instructed below.
3. If you are adding an AM-219 floppy controller board, refer to PDI-00219-00 (Rev. A01 or later), for installation instructions. Follow the directions for attaching the AM-219 to an AM-319-20 in an Eagle 550.
4. Unplug and mark all cables from your old AM-174 board:
   - DC power cable
   - Two 34-pin bus cables (C/S and A/D)
   - 50-pin SCSI cable
5. Remove all I/O boards from the Super Eagle rear panel, and set them aside. For I/O board compatibility, please refer to Chapter 2.

REMOVE OLD ROADRUNNER BOARD

1. Remove the four screws at the corners of the old Roadrunner board (AM-174) . Two additional screws may have been used—remove those, too. Lift the board up and out.
2. Remove the perforated screen and rubber feet from the bottom of the chassis. It may be mounted with four screws or four small plastic pins through feet.

You can discard the old feet and plastic pins. In the upgrade kit, you will find a new set of feet with screws and nuts.

3. Lift the screen up and out and discard it. The AM-176 board has different mounting locations.

PREPARE CHASSIS FOR UPGRADE

1. Remove existing SIMM from the AM-174 board, and set it aside.

If your chassis is furnished with a PC card guide mounting bracket mounted nearest the bezel at the front of the chassis, remove it as follows:

- Remove the six screws that attach the front bezel panel to the chassis.
- Remove the two screws that attach the power switch to the chassis. Carefully, pull bezel out of the way.
- With a 3/16" drill bit, drill out the four aluminum rivets that attach the PC card guide mounting bracket to the chassis (working from the outside of the front panel).
- Remove the PC card guide mounting bracket.
- Clean all the debris from outside and inside the chassis.
- Re-attach bezel and power switch.

2. Install the new screen in place of the old screen. Use the screws and standoffs provided in the kit. Standoff pattern for mounting the AM-176 board must be nearest the bezel. Ensure that standoffs are pointing to top of chassis. Use Phillips pan-head screw from outside chassis through new foot, chassis, into screen with a short standoff (in each of the four locations). Please refer to Figure F-2.

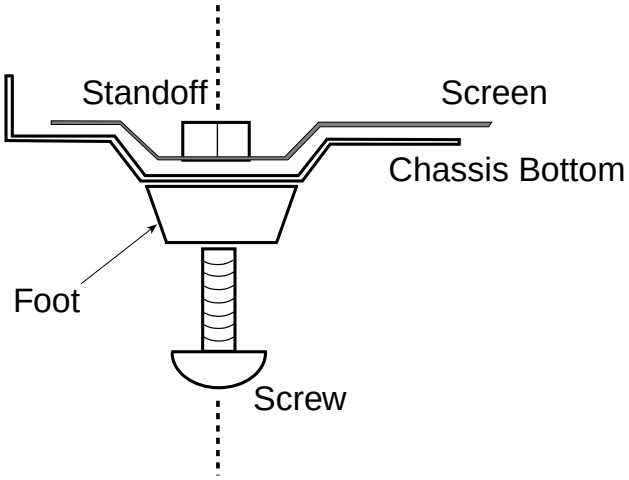

Figure F-2: Deskside Chassis Foot Installation

INSTALLING THE AM-176 BOARD

1. Since the AM-319-20 board occupies the first slot on the rear panel, attach the AM-176 I/O panel (DWF-20772-01), which has an Ethernet AUI port and a DB-9 serial port cable, on the slot next to the AM-319-20 board.
2. Place AM-176 board on the mounting screen. Fasten at the four locations.
3. Install the external cache SIMM at J1. For specific SIMM installation instructions, please refer to Chapter 3.
4. Install memory SIMMs in **pairs of equal capacity**. Refer to Table 3-1 for explicit configurations to accomplish the desired total memory.
5. Once the memory is installed, set the memory size jumpers on the AM-176 board, as shown in Table 3-2.
6. Attach the following cables to the AM-176 board:
   - Serial I/O cable at P9
   - AUI cable at P1 with a 180° twist to align the red stripe on the cable with pin-1 on the connector
   - One of the 4-pin DC power connectors from power supply at P7
7. Attach the two Roadrunner X-bus cables from the AM-319-20 board to the AM-176 board, as follows:
   - C/S bus cable plugs into P6 on the AM-176 board (from P8 on the AM-319-20 board).
   - A/D bus cable plugs into P4 on the AM-176 board (from P7 on the AM-319-20 board).

All the cables mentioned have keyed connectors. It is vital that you always align the red stripe on the cable with pin-1 on the connector.

6. Attach each I/O board using the third through the seventh slots. Connect A Channel at P3 and B Channel at P6 on the AM-319-20 board. Make certain the last I/O board is terminated and the I/O cable stops on last connection.
7. Reposition the AM-319-20 mounting plate on the side of the chassis by sliding it into the rear panel slot and pushing the mounting plate down into the two locating tabs at the bottom side of chassis and securing it with the two original screws. Attach mounting plate to the rear panel with three screws. **Make sure the phone jack connections fit through the lower slot in the rear panel.**

Installing the SCSI Cable

The AM-176 board includes two SCSI connectors: a 50-pin connector used for SCSI and SCSI-2, and a 68-pin connector used for Wide SCSI. Please refer to Chapter 2 for more information on SCSI devices and cables.

1. Once you have determined which connector you need to use:
   - Plug the 68-pin Wide SCSI cable (DWB-10319-00), included in your Wide SCSI kit, at P5.

     or
   - Plug your existing 50-pin SCSI cable (DWB-10302-05) at P2.

These two SCSI cables are mutually exclusive. Always use one, never both.

2. Plug in connectors to SCSI disk drives and tape drives, as required.
3. Route SCSI cable to the SCSI slot on the rear panel.
4. Make sure SCSI bus is terminated properly. This normally means plugging an external terminator into the external SCSI port on the rear panel. See Appendix A for more information on SCSI termination.

Please refer to Chapter 2 for compatibility and additional information on the SCSI devices and cabling.

FINISHING UP

1. Install the 060 Roadrunner logo plate near the power switch on the bezel.
2. Re-attach all cables to the AM-319-20, as required:
   - Printer cables at P5 (LPT0), P2 (LPT1), P1 (LPT3), and P4 (LPT3)
   - 20-pin display cable at P11

The hardware portion of the upgrade is complete. Return to Chapter 6 for the testing and booting procedures for the Roadrunner 060. Perform these procedures before replacing the top cover, in case you need to make some adjustments. When you are done, fasten top cover with the 4 original screws.

Appendix G - Super Eagle in AM-990 or AM-990 Jumbo Chassis Upgrade

The following instructions explain the process of installing an AM-176 into a Super Eagle computer in an AM-990 and AM-990 jumbo chassis. The upgrade kit includes all the necessary hardware for installing the AM-176 board.

PREPARING FOR THE UPGRADE

Before embarking on this upgrade, please ensure you have completed all of the steps in Chapter 5 "Beginning a Roadrunner Upgrade." Do not begin the hardware installation until you've performed all of the necessary preliminary processes.

While your computer's hardware is exposed and the AC power cord is unplugged, the components are vulnerable to damage caused by static discharge. Before you handle any computer hardware, make certain your work area is properly protected against static discharge.

ACCESSING YOUR HARDWARE

1. Power down your computer. Remove all the cables attached to the rear panel, including the power cord.
2. Insert the key originally shipped with your computer in the door lock and open it.
3. To remove the top panel:
    - Swing the front door open to expose the screws that hold the top cover in place. See Figure G-1.
    - Remove the two Phillips-head screws that connect the top cover to the chassis.
    - Remove the display key from the front panel before you attempt to remove the top cover.
    - Slide the top cover forward and lift it off. Set it aside.

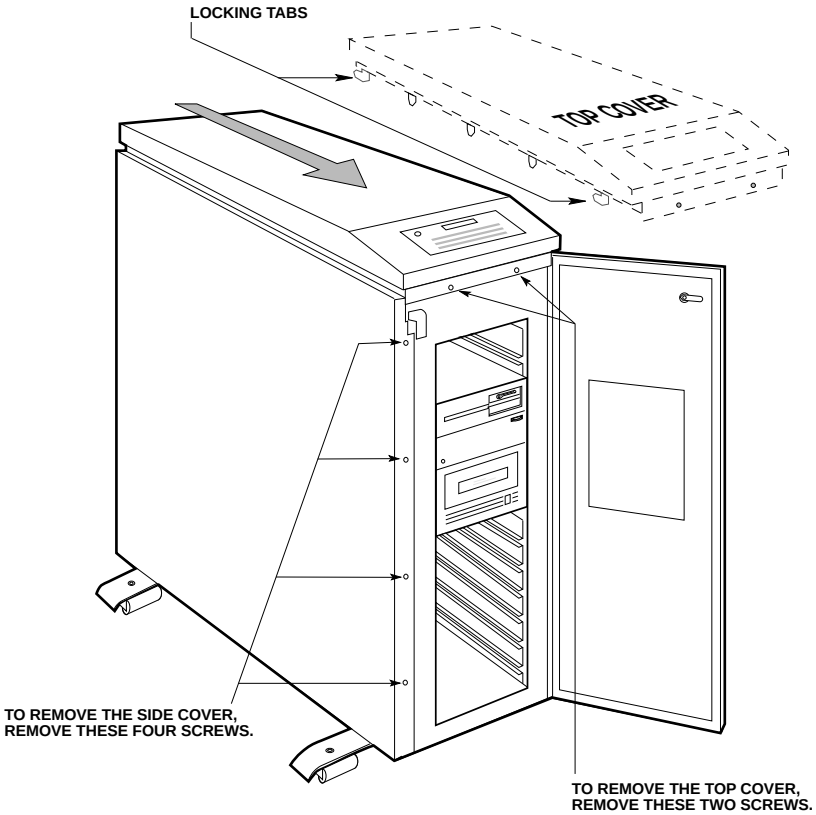

Figure G-1: AM-990 Enclosure Removal

4. To remove the side and rear panels:
   - Swing the front door open to gain access to the screws that hold the side panel to the chassis.
   - Remove the four screws along the left edge (behind the front door). Lift the side panel, slide it to the front, and place it out of the way.

   For ease of assembly, lay the AM-990 chassis on its side, bezel away from you. We recommend that you place the chassis on a padded work surface. Remove the feet from the bottom of the chassis, or let them hang over the edge of a table.

   - Remove the card cage lid (DWF-20670-00) by removing the five screws and lifting it out of the way.
   - Remove the four screws that hold the rear I/O panel to the card cage and unplug I/O cable.
   - Move the rear I/O panel out of the way. You will be installing a new I/O rear panel, included in your upgrade kit.

ASSEMBLING THE NEW REAR I/O PANEL

A new, extended rear panel assembly is included in your upgrade kit.

1. Attach the four parallel printer ports to the first slot in the rear panel (when installed in the chassis, this should be the first slot above the AM-319-20 board).

2. Attach the 060 Roadrunner I/O rear panel with serial I/O 9-pin D-Sub connector and AUI (Ethernet) connector to the second slot in the I/O panel (immediately above the printer ports).
3. Attach the I/O paddle cards to the third through the sixth slots on the rear panel. Refer to Chapter 2 for I/O board compatibility. Make certain the last I/O board is terminated and the I/O cable stops on the last connection.
4. Lay the I/O panel assembly flat next to the chassis, as if it were ready to tilt up 90° and attach to the chassis (with paddle cards up).

REMOVING THE OLD ROADRUNNER (AM-174) BOARD

1. Unplug the following:
   - SCSI cable
   - X bus cables (label the connectors on this end of the cable to identify them as C/S or A/D when attaching them to the connectors on the AM-176 board)
   - DC power cable
2. Slide the AM-174 board and its mounting plate out the rear panel and set it aside.

INSTALLING THE AM-176 BOARD

1. Assemble AM-176 board to the mounting plate (DWF-20762-01) with four Phillips pan-head screws (.312" long).
2. Fasten the nylon screw included in the kit into the second threaded standoff from the top (centered left to right), in the front of the card cage so when you slide the AM-176 board into position, there is no possibility of damaging the processor connector at P8.
3. Install the external cache SIMM at J1. For specific SIMM installation instructions, please refer to Chapter 3.
4. Install memory SIMMs in **pairs of equal capacity**. Please refer to Table 3-1 for explicit configurations to accomplish the desired total memory.
5. Once the memory is installed, set the memory size jumpers on the AM-176 board. Refer to Table 3-2.
6. Carefully slide the mounting plate, with the AM-176 board mounted on it, into the fourth nylon card guide from the top to allow room for all the I/O paddle cards. Make sure you orient the AM-176 board so the SCSI connector is toward the rear of the chassis.
7. Plug in the DC power connector from the power supply at P7 on the AM-176 board.

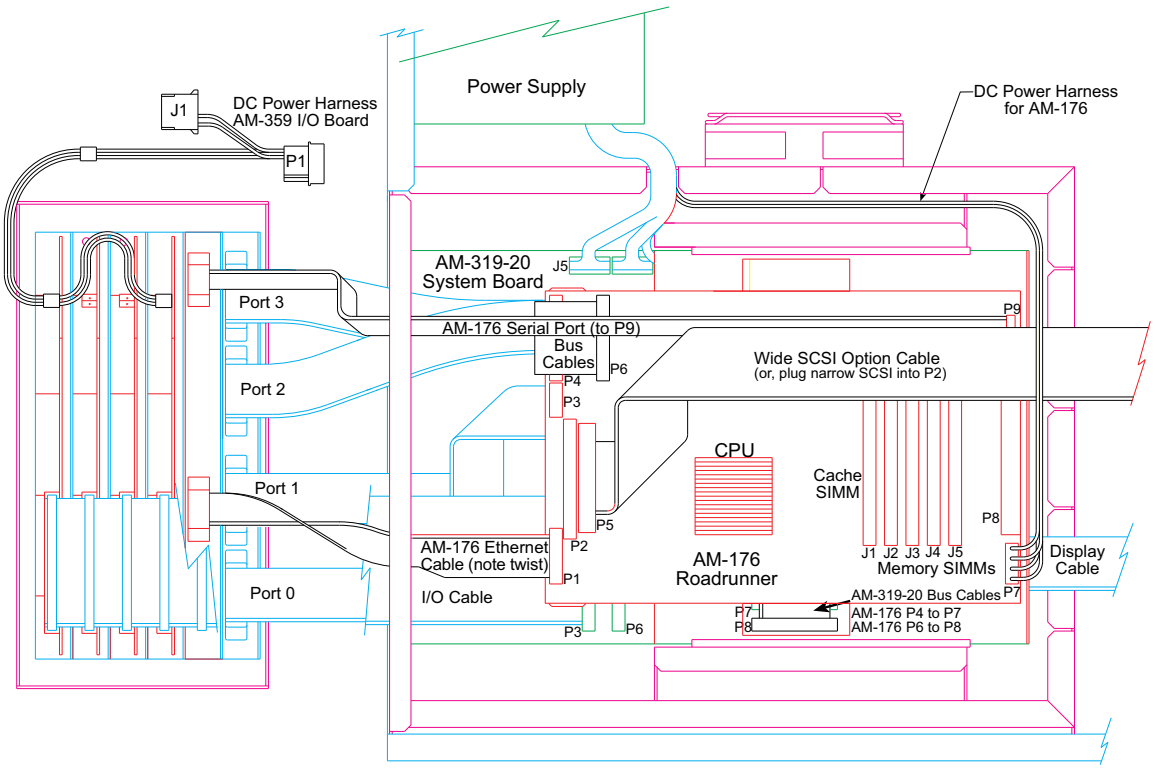

Figure G-2: AM-319-20 and AM-176 Cable Routing

X-Bus Cable Routing

These cables have keyed connectors. It is vital that you always align the red stripe on the cable with pin-1 on the connector.

Connect the two Roadrunner X-bus cables (originating at the AM-319-20 board) to the AM-176 board, as follows:

- C/S bus cable into P6 on the AM-176 board (from P8 on the AM-319-20 board)
- A/D bus cable into P4 on the AM-176 board (from P7 on the AM-319-20 board)

Installing the SCSI Cable

The AM-176 board includes two SCSI connectors: a 50-pin connector used for SCSI and SCSI-2, and a 68-pin connector used for Wide SCSI. Please refer to Chapter 2 for more information on SCSI devices and cables.

1. Once you have determined which connector you need to use:
   - Plug the 68-pin Wide SCSI cable, included in your Wide SCSI kit, at P5. For the AM-990 chassis, use DWB-10319-01; for the AM-990 Jumbo chassis, use DWB-10319-02.

     or
   - Plug the new 50-pin SCSI cable included in your upgrade kit, at P2. For the AM-990 chassis, use DWB-10302-04; for the AM-990 Jumbo chassis, use DWB-10302-09.

These two SCSI cables are mutually exclusive. Always use one, never both.

2. Mount the card cage cover plate (DWF-20304-00) on top of the card cage and attach with four screws, on per corner.
3. Route the SCSI bus cable over the top of the cover plate so it cannot interfere with the fan on the AM-176 board.
4. Route the SCSI cable to the SCSI peripherals and out to the external SCSI connector on the internal top panel or on the rear of the display panel. Plug in the cable to each SCSI disk or tape drive.

If you are connecting Wide SCSI devices to a narrow cable, or vice-versa, be sure to use the appropriate adapter between the device and the cable connector.

6. Make sure the SCSI cable is terminated properly. This normally means plugging an active external terminator into the external SCSI port on the internal top panel or on the rear of the display panel. See Appendix A for more information on SCSI termination.

Please refer to Chapter 2 for compatibility and instructions on the installation of SCSI devices and cabling.

INSTALLING NEW REAR I/O PANEL

To ensure all the I/O boards have adequate space, we have enlarged the card cage by adding a new, deeper rear panel. Once you've attached the I/O paddle cards to the new I/O rear panel, install it as follows:

1. Using the twelve ½" x 6/32 standoffs in your kit, make four sets of spacers (1.5" long each), by threading three standoffs together.
2. Fasten the spacers into the four corner holes on the rear of the card cage.
3. Connect the I/O paddle board cable to the A Channel at P3 on the AM-319-20 board, and the optional B Channel at P6.
4. Plug the serial 9-pin D-Sub connector from the rear panel to P9 on the AM-176.
5. Plug the AUI (Ethernet) cable from the 15-pin D-Sub connector in rear panel to P1 on the AM-176 board. You must twist the cable for correct pin-1 orientation.
6. Tilt the I/O panel up and fasten to the four new spacers you mounted to the back of the card cage.

7. Fix the AM-176 board with the retainer bracket (DWF-20782-00) provided in the kit. Make sure the tab on the bracket goes into the slot on the card cage. See Figure G-3.

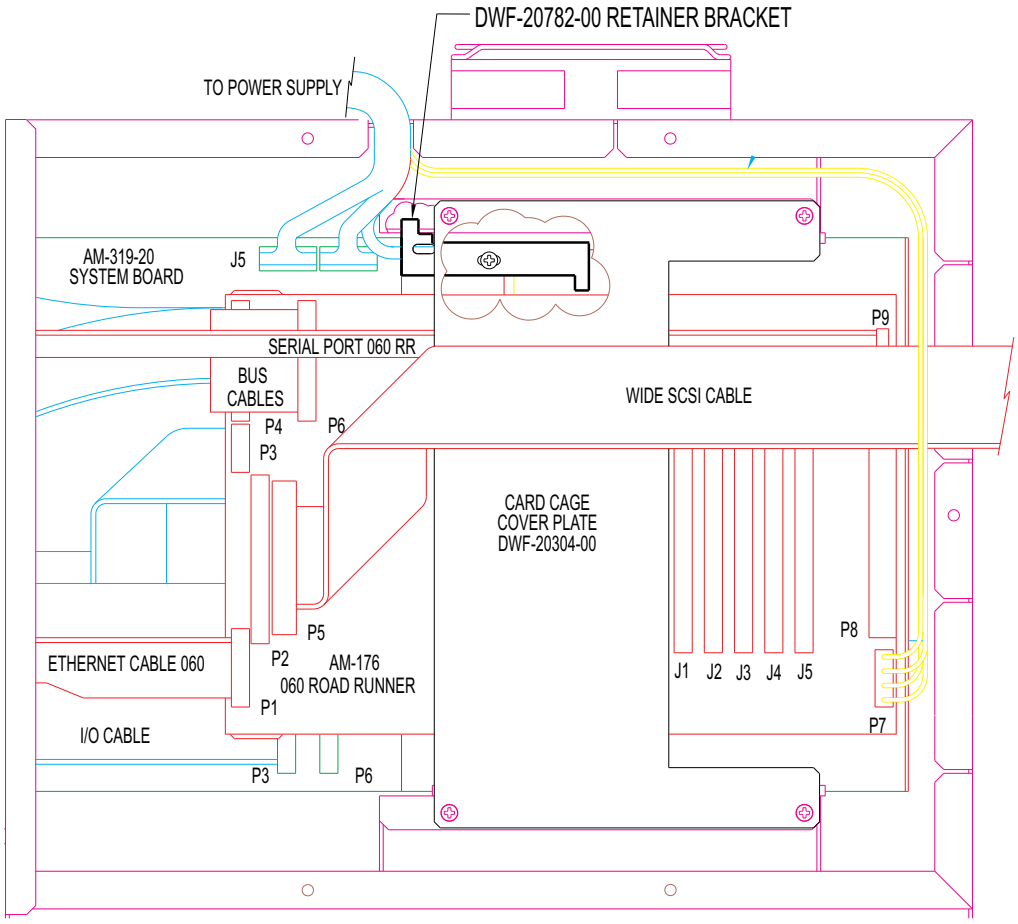

Figure G-3: AM-176 Retainer Bracket Placement

FINISHING UP

The hardware portion of the upgrade is complete. Return to Chapter 6 for the testing and booting procedures for the Roadrunner 060. Perform these procedures after attaching the computer's enclosure, in case you need to make some adjustments.

Once your system completes the testing procedures successfully, replace the enclosure, as follows:

1. Replace the card cage lid and attach with five screws
2. Replace the side panel and tighten the four screws along the left edge
3. Replace the top cover. Tighten the two screws along the top edge.
4. Close and lock the front door.
5. Install the 060 Roadrunner logo plate on the front door near the Alpha Microsystems logo.